OFFICE OF THE REGISTRAR
14 JUN 1956
MADRAS
1444
2-56

IN YOUR OWN INTERESTS

HOW TO PURCHASE TICKETS

Buy your tickets only at the proper place. The authorised offices are (i) the Booking offices at the railway stations, (ii) the Town or City Booking Offices, (iii) the out-Agencies, (iv) Travel Agents. Never buy tickets from any other source as that may lead you to trouble. Please note that tickets are not transferable.

Buy your tickets in the proper time. You can avoid unnecessary excitement and trouble if you come to the station in good time, that is at least half an hour before the scheduled departure of your train. The Time Tables of the Railway are on sale at Booking Offices and Bookstalls.

Buy your tickets in the proper manner. Queue up at the Booking Window and you can get your ticket easier and quicker than by crowding at the counter.

By handling in the *exact fare in good coins or currency* you get the ticket easier and quicker, and save for yourself and the Booking Clerk time and trouble.

Check up your ticket and money before leaving the counter and draw the attention of the Booking Clerk to any discrepancy you may notice.

(Inserted in the interests of Travelling Public)

Australian Gift Locomotives Due Soon in Pakistan

TRAVELLERS on Pakistan's North Western Railway will soon ride in trains drawn by streamlined diesel electric locomotives named after Australian cities—SYDNEY, BRISBANE, HOBART, MELBOURNE, ADELAIDE, PERTH, CANBERRA, NEWCASTLE and GEELONG.

The nine locomotives, built in Australia and worth more than £A1,115,000, are a present from Australia to Pakistan under the Colombo Plan.

With 1500 horsepower engines, and special heavy-duty bogies designed and built in Australia, the locomotives have a top speed of 77 miles per hour. They are similar to those used on the 1100-mile trans-Australian run across the Nullarbor Plain between South Australia and Western Australia.

Manufactured by the Clyde Engineering Co. Ltd., of Granville, near Sydney, which has been building railway locomotives for half a century, they have been shipped in one consignment by the Norwegian freighter BELBETTY.

The BELBETTY is one of nine ships designed by Christen Smith Line of Oslo, Norway, for transporting railway engines.

Like her sister ships, the BELBETTY has loading gear which can handle up to 200 tons. It was for this reason that the ship was chartered by the Australian Government to transport the locomotives to Pakistan. Karachi port facilities are limited to lifts of 60 tons.

Each locomotive, complete with two sets of bogies, weighs 110 tons. The bogies are 20 tons each, the stripped locomotives 70 tons.

It took more than a week to marshal and transport the locomotives from Clyde Works at Granville and load them aboard the freighter. Heavy rain hampered the proceedings.

The locomotives were mounted on loose wheel bogies or trucks and hauled to the Sydney waterfront from Granville—a distance of 10 miles—by steam train. This was done between midnight and daylight to prevent interference with normal main suburban line traffic.

There were tense moments during the loading. A pair of giant calipers lifted the stripped locomotives from the wharf and deposited them in the ship's hold.

The bogies were loaded in pairs. When one batch was being swung aboard, the rear wire guy rope snapped and curled like a paper streamer. As the bogies swung crazily above the ship it was feared they would go crashing into the hold. Fortunately the other rope held.

The BELBETTY is designed to carry eight stripped locomotives and 18 bogies below. Only one locomotive was placed on deck.

The green and white locomotives were protected by wooden casings over the driving cabin and other exposed parts, and by masking tape over chromed portions. Replacement parts and service tools were included in the consignment, to minimise any loss of running time when they go into operation.

Mr. Peter Austin, a service engineer from Clyde Engineering Co. Ltd., Sydney, will be on hand in Karachi to supervise their unloading. He will be in Pakistan for at least six months to supervise their assembly and to instruct drivers and maintenance mechanics.

NEW DIESEL-ELECTRIC LOCO GIVES DRIVER ALL-ROUND VIEW

Developed to meet the needs of heavy industry, a new British Diesel-electric shunting locomotive is said to provide for the driver an all-round view probably unique in vehicles of this type. The locomotive is being produced in two versions—one of 200 hp. and the other of 400 hp. Both have Rolls-Royce Diesel engines and British Thomson-Houston transmission. By adoption of the comparatively new 200-hp. Rolls-Royce oil engine, the builders say, the new loco has been provided with an engine generator set considerably smaller than is typical in installations of its horsepower. This, besides reducing costs, makes possible a smaller bonnet, thus improving visibility from the locomotive cab. The driving cab is centrally placed, with doors opening on to diagonally opposite platforms accessible from the front and rear buffer platforms. The control desk in the centre of the cab is positioned to allow the driver considerable freedom of movement without lose of visibility. All the controls are duplicated at either end of the desk.

RAILWAY MINISTRY BIFURCATION

RECOMMENDATIONS OF COMMITTEE

THE bifurcation of the present Ministry of Railways and Transport into two separate Ministries under the charge of separate Ministers has been proposed by the Estimates Committee of the Lok Sabha.

The Committee feel that with less than three months left to launch the Second Five-Year Plan any radica change in the central controlling authority of the railways will have far-reaching repercussions and will adversely affect the progress on the plan. The Committee therefore do not suggest any radical change of this nature. The Committee feel that consultation between the various Ministries and the Ministry of Railways should not necessarily result in abnormal delays. A special watch by the Organisation and Methods Division over the cases requiring prior consultation with other Ministries will go a long way in minimising delays.

In order to control and direct the huge expenditure that would have to be incurred in the Second Five-Year Plan and to ensure that proper results are achieved, the Committee are of the opinion that the Railway Board should be strengthened by one additional member. He should be a member to be in charge of civil engineering work which is at present in charge of the Chairman of the Railway Board. The Committee feel that the work should be assigned to a separate member and the Chairman should be free to co-ordinate the work of the various members and to advice the Minister on policy matters. He should also be incharge of the planning section of the Railway Board and the Efficiency Bureau.

The Committee recommend that periodical meetings should be held by the Railway Board at regular intervals with the General Managers of all railways with a view to ensuring better co-ordination. It also recommend that the Chairman and the members of the Railway Board should undertake frequent tours to enable them to study important problems on the subject, give their advice to the General Managers and head of the departments, to keep contact with the representatives of the trade and industry and the general public and appreciate their difficulties.

VIZAG PORT

The Committee do not see any special justification for the retention of the Visakhapatnam port under the management of the Railway Ministry and it recommend that it should be handed over to the Ministry of Transport. They consider that the zonal consultative committees as at present constituted are too unwieldy a body and therefore suggest that there should be a council of advisers consisting of not more than five individuals to advise the General Managers in the different matters pertaining to the administration of the railways. The president of the recognised union of the railway should also be included in the Council so that the question pertaining to staff matters might also be discussed at the meeting of the Council which should be held once a month. The other members should be selected by the Minister for Railways from amongst retired, experienced administrators and prominent public men with business experience and legislators who have specialised in transport problems in this country.

Other main recommendations of the Committee were: The headquarters of the Western Railway should be situated at a station served by both the Broad Gauge and Metre Gauge lines. Till the scrutiny and examination of the question of shifting of headquarters was made, the Senior Deputy General Manager of the Western Railway should be posted at a station on the Metre Gauge, for instance, at Ahmedabad or Ajmer and should be in overall charge of the Metre Gauge section there.

The Senior Deputy General Manager of the Southern Railway should be placed at a station "more centrally situated on the M. G. section" of that zone.

The Divisional system should be introduced expeditiously on all Indian railways.

The four districts of the Western Railway, namely, Jamnagar, Junagadh, Bhavnagar and Abu, should be converted into at least three divisions.

The question of assigning the work of day-to-day administration and co-ordination to a separate wing in the Railway Board office might be considered with advantage.

The Zonal Consultative Committees should be replaced by Councils of advisers of five members to advice the General Managers of different railways.

The Posts of Director, Rail Movement, Calcutta, and the Tank Wagon Controller, Bombay, should be abolished.

Spherical Roller Bearings in Railway Axleboxes

RAILWAY axlebox bearings have always been of vital importance to the reliability of railway vehicles and have for long been a factor having a considerable influence on the running economy of railways. Ever since railways first came into being, constant efforts have been made to improve the design of the bearing—not only to make them more reliable and economical, but also to make possible larger payloads, higher train speeds and to reduce starting resistance.

It is now generally recognised that rolling bearings offer the solution to the railway bearing problem, particularly for the heavy, high-speed and intensive railway traffic conditions which prevail to-day. The success of rolling bearings has been achieved by the joint efforts of the rolling bearing industry and the railways over a long period of years.

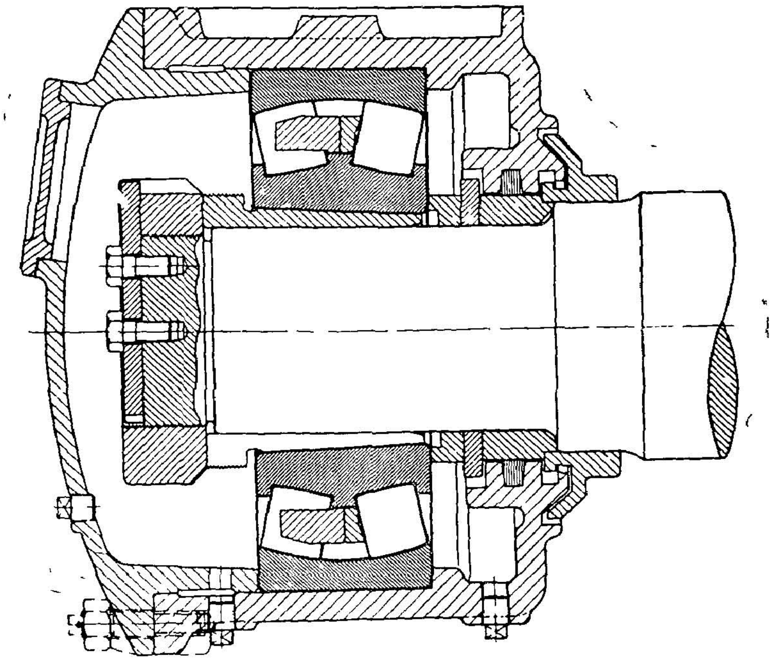

Fig. 1. Axlebox for heavy American passenger bogies installed in 1921.

Special interest is centred on this matter at the present time because SKF has just announced the supply of the millionth SKF axlebox. For many years a pioneer and leader in the field of railway bearings the SKF organisation is believed to be the first Company to have reached this total. The vast majority of the million axleboxes so far supplied have been equipped with double row spherical roller bearings, a type which was specially designed and introduced to solve railway bearing problems.

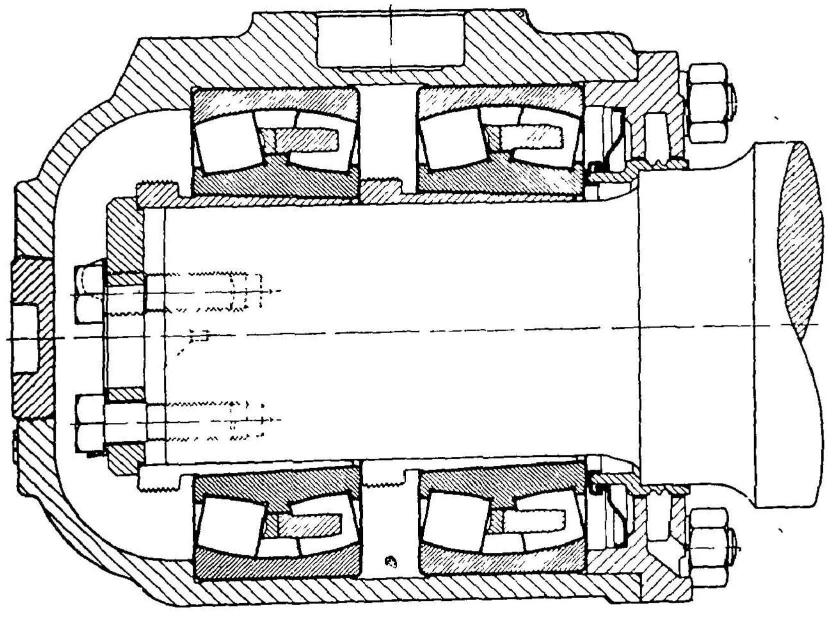

Fig. 2. Roller bearing axlebox fitted with two spherical roller bearings for four-wheel goods wagons.

A study of the development and of the part played by this type of bearing may therefore be of historical and current interest.

As far back as 1911 axleboxes incorporating self-aligning ball bearings, were fitted experimentally by SKF to a number of heavy passenger coaches on the Swedish State Railways, and shortly afterwards a number of steam locomotives were similarly equipped. For reasons which are obvious in the light of later experience, the restricted space available for the axleboxes did not permit the fitting of ball bearings with sufficient carrying capacity. Better results were achieved, however, with 6-wheel ore trucks on the North Swedish ore railways, to which a large number of ball bearing equipped axleboxes were fitted from 1915 onwards. Extensive examinations were made, however, of the train resistance compared with plain bearings equipped trains, which proved that the saving in power and the permissible increase in train lengths would offset the additional cost of the bearings. The reduction in the starting resistance was found to be very considerable, particularly in very cold weather. At this stage, however, one of the Major advantages of rolling bearing axleboxes—increased reliability and reduced maintenance cost—did not immediately become apparent. That was to follow later with the large scale use of roller bearings in railway vehicles.

The ball bearing installations mentioned above were very largely of an experimental nature, but meanwhile SKF seriously took up the question of railway vehicle

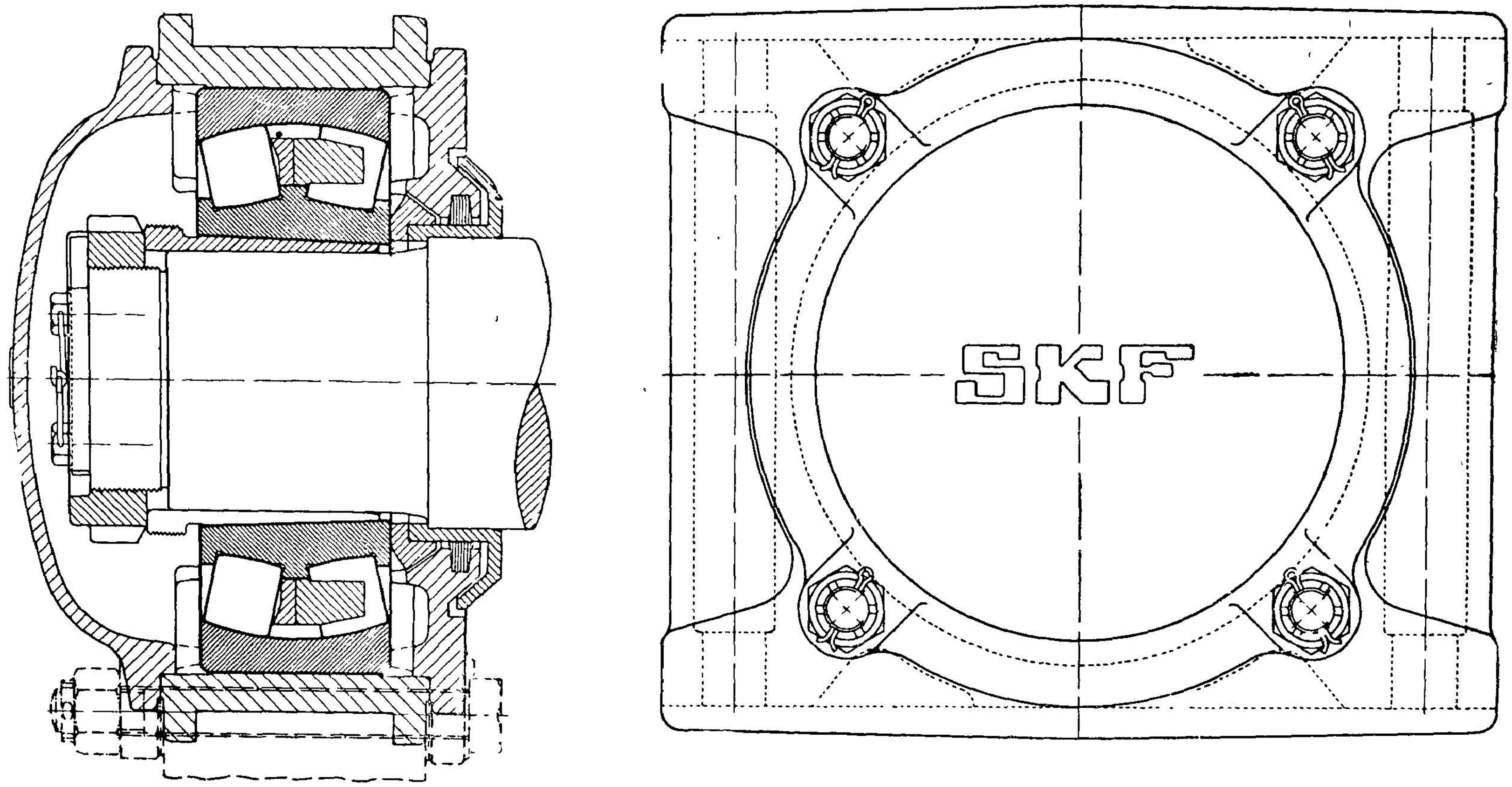

Fig. 3. Completely self-aligning axlebox for diamond bogie of locomotive tender.

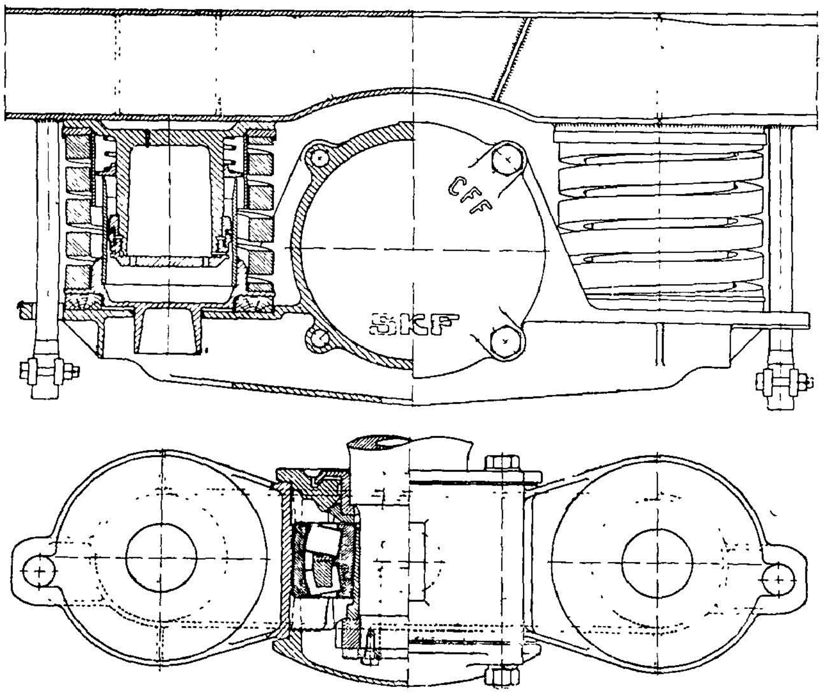

Fig. 4. Bearing scheme of Swiss Schlieren bogie. The axlebox is fitted with one spherical roller bearing.

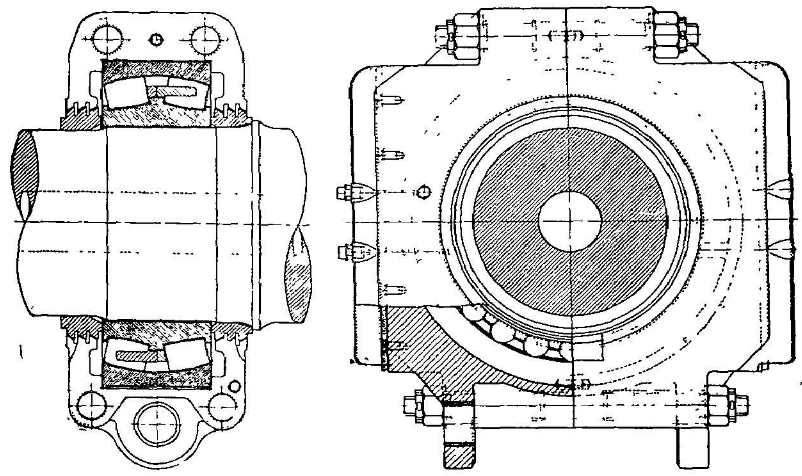

Fig. 5. Single bearing axlebox for the driving and coupled axles of steam locomotives.

working conditions and the problems encountered with the design of bearing schemes, with the object of producing a suitable type of bearing for railway service. It was quickly realized that the problem could only be solved by using roller bearings of very high carrying capacity, and efforts were centred on designing a self-contained, non-adjustable unit capable of carrying thrust loads in both directions.

In 1919–1920, the first SKF double row spherical roller bearing was put to its first practical tests on the Swedish State Railways. This marked an important turning point in the development of railway bearings because for the first time a roller bearing became available which had been designed specifically for railway service.

In 1921 an installation of considerable significance was carried out on the Pennsylvania Railroad, when 48 axleboxes of the type shown in Fig. 1 were fitted. These

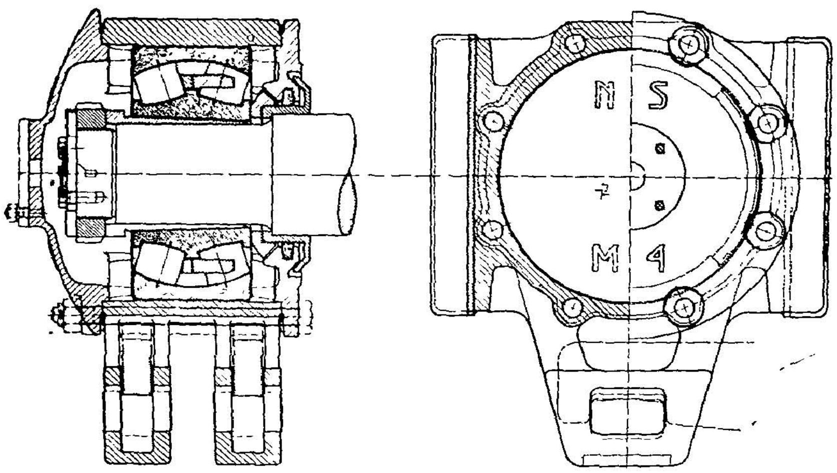

Fig. 6. Axlebox with load carried by an underslung equalizing beam for motor bogie of Dutch multiple unit stock.

axleboxes remained in service until 1946, when the coaches were scrapped. The design of this axlebox is of special interest because it was the first time that a single, completely self-aligning bearing had been used successfully in a railway axlebox. It was also the first time that axlebox bearings had been mounted on withdrawal sleeves—a feature which ensured a tight fit between the bearing inner ring and the axle journal, even though the journal might be machined to a relatively coarse tolerance. Dismounting of the bearing for inspection of the journal was also greatly facilitated.

Nowadays, the use of modern workshop equipment ensures accurate machining of axle journals to close tolerances. This has led to a saving in cost and space, because it enables the bearing to be mounted direct on the axle journal.

On four-wheel wagons, which are the most common type of goods vehicle in Europe, two bearings are used per axlebox, as shown in Fig. 2. This bearing scheme has become the most widely used for many different types of railway vehicle—both for rolling stock and locomotives—even though the self-aligning properties of the spherical roller bearing are not completely utilized.

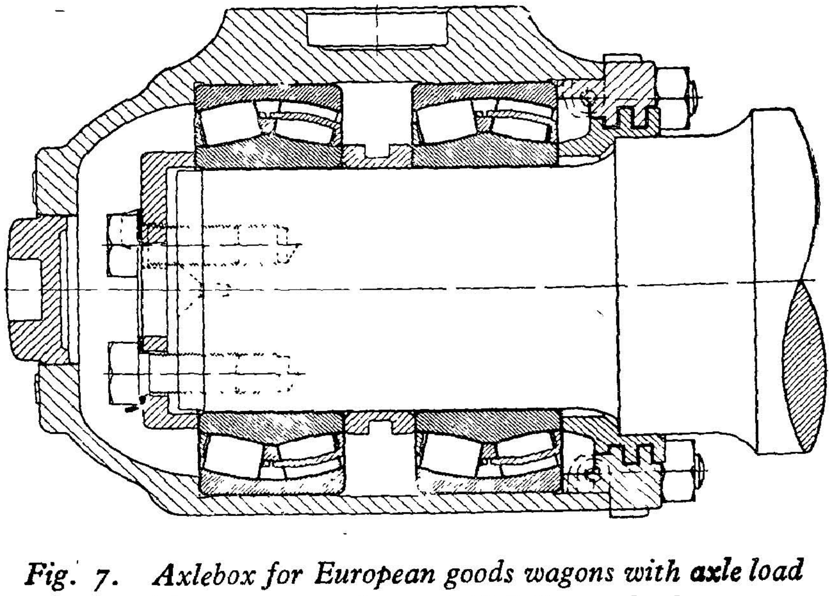

Fig. 7. Axlebox for European goods wagons with ***axle load*** *of 20 tons, manufactured U.I.C. standards.*

In many cases, however, the unique self-aligning properties of spherical roller bearings have given considerable freedom to the vehicle designer in drawing up bogie, rolling stock and locomotive designs. A single bearing axlebox with one spherical roller bearing (Fig. 3) is virtually essential in diamond-type bogies. In other cases the self-aligning properties of the axlebox have led to simplicity of design, flexibility and other advantages. An outstanding example is the Swiss bogie bearing scheme shown in Fig. 4, which has become world famous because of its excellent riding qualities. Single bearing axleboxes also offer advantages on locomotives because their narrow width allows them to be fitted inside the wheels on driving and coupled axles. A single bearing design often offers the most efficient and economical solution for axleboxes which are bottom-loaded either by underslung carrying springs or equalizing beams as shown in Fig. 6.

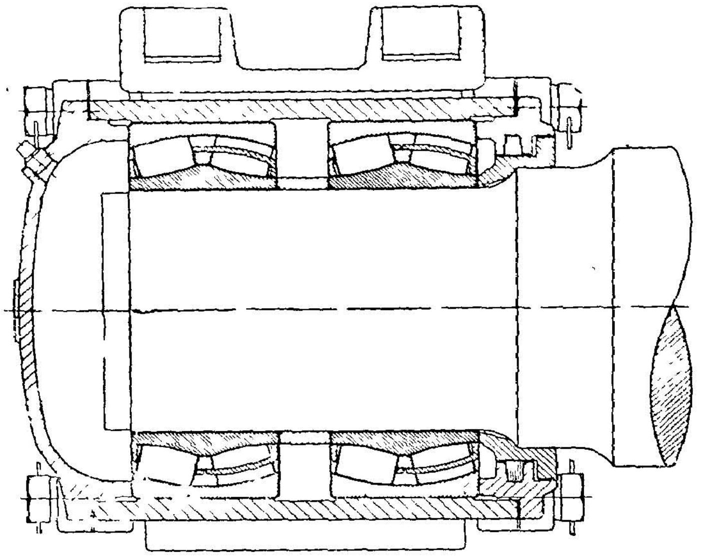

Fig. 8. Axlebox for American passenger coaches, electri locomotives and diesel locomotives with axle loads up to 24 tons, and manufactured to A.A.R. standards.

Over the years the demands made on the performance of roller bearing axleboxes have become more and more severe. Axle loads, train speeds and annual mileages have increased, and at the same time the tendency in modern bogie and vehicle design has been to restrict still further the available space for the roller bearings. This has confronted roller bearing manufacturers with the problem of developing bearings with even greater carrying capacity in relation to their size. SKF successfully solved this problem by a radical redesign of the spherical roller

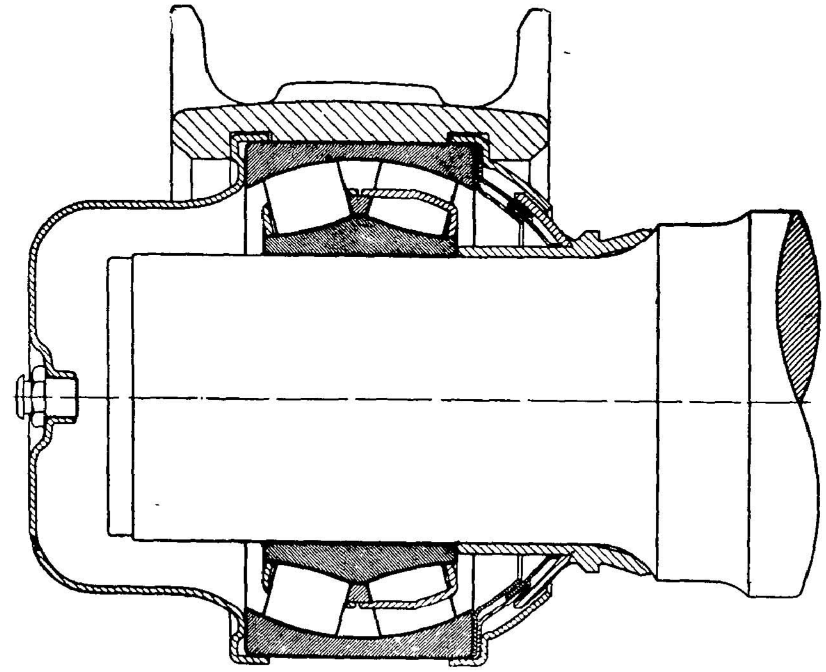

Fig. 9. Rocker-type axlebox for American goods wagon bogies.

bearing to give no less than a 40% increase in its carrying capacity. This development marked a major advance in the field of railway bearings and made possible the successful application of axleboxes with smaller external dimensions than hitherto for given loads.

Examples of axleboxes incorporating the redesigned spherical roller bearing are illustrated in Figs. 7 and 8, Fig. 7 shows an SKF goods wagon axlebox for four-wheel wagons with an axle load of 20 tons, conforming to U. I. C. standard dimensions. Fig. 8 shows an SKF axlebox for passenger coaches, electric locomotives and diesel locomotives with axle loads up to 24 tons, conforming to A. A. R. standards.

An axlebox for American goods wagon bogies, Fig. 9, is undergoing extensive tests in the U. S. A. Free axial oscillation of the axle in relation to the bogie frame, made possible by the self-aligning feature of the bearing, makes this axlebox particularly suitable for high train speeds. Moreover, this bearing scheme is probably the most economical ever produced for goods wagons.

The development during recent decades has also resulted in the manufacture of satisfactory axleboxes fitted with cylindrical or taper roller bearings of suitable design, each possessing characteristic features. Spherical roller bearings, however, occupy a central position in modern railway bearing engineering as general-purpose bearings. The millionth SKF axlebox was fitted with spherical roller bearings.

YOUR MAGAZINE

The Southern Railways Magazine offers you a variety of topics—short stories, pictures historical, humorous articles, news, technical railway engineering in its various aspects every month. It only costs Rs. 3 per year. For Railway personnel Post-Free. Fill this in and become a subscriber to-day itself.

CUT HERE

Kindly enrol me as an annual subscriber from the month of

.... *to* .... *195* .

Cheque enclosed. Remittance despatched by M. O. (Strike out whichever is unnecessary)

Name ....

Address ....

To

The Circulation Manager,

SOUTHERN RAILWAYS MAGAZINE,

Post Box 17,

TANJORE (S. I.)

DIESEL-ELECTRIC SHUNTING LOCOMOTIVES

350-B.H.P. UNITS FOR BRITISH RAILWAYS

TEN of the batch of 85 Diesel-electric shunting locomotives that has been ordered by British Railways are being fitted with traction equipment made by Crompton Parkinson, Limited, Chelmsford, and engines made by Crossley Brothers, Limited, Manchester, 11. These locomotives are all of the 0–6–0 350-h.p. standard design of which many are already in use in various parts of the country. The Crompton Parkinson/Crossley batch are at present being tested and commissioned. Their maximum tractive effort is 35,000 lb. with a continuous value of 15,400 at $5\frac{1}{2}$ m.p.h. With a weight of 46 tons, the maximum speed is 20 m.p.h.

The Diesel engine used is the EST6, of which many are already in service in Diesel-mechanical shunters. It is a robust unit of 7-in. bore and 9-in. stroke, using the two-stroke cycle and employing the port-controlled loop-scavenge principle in conjunction with exhaust-pulse pressure charging. All parts are readily accessible for maintenance, including the exhaust ports which can be reached through doors in the exhaust manifold. An engine undergoing trials is shown in Fig. 1. The illustration also shows clearly the standard three-point mounting system for the complete engine and generator unit. The one-hour traction rating for this engine is 400 brake horse-power at 900 r. p. m. For this application the maximum speed is 825 r. p. m. and the service idling speed 350 r. p. m.

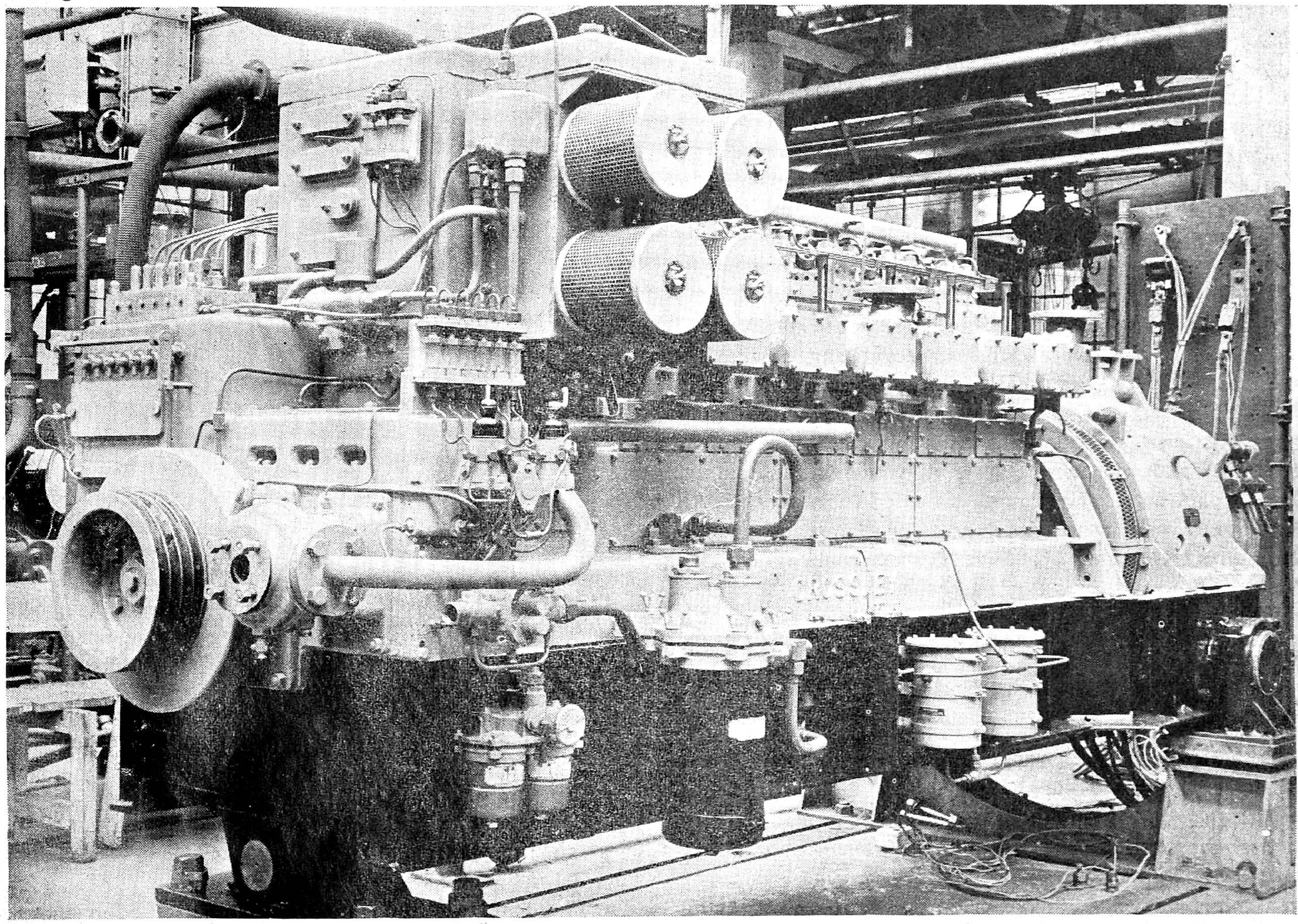

Fig. 1. The Crossley EST-6 two-stroke loop scavenge engine is close-coupled to a Crompton Parkinson generator to form the power unit of a shunting locomotive having a maximum traction effort of 35,000 lb.

MAIN GENERATOR

The main generator has a 1-hour rating of 220 kW. 570 amps., 385 volts, 825 r. p. m. and a continuous rating of 214 kW, 492 amps., 435 volts, 825 r. p. m. It is a single-bearing self-ventilated machine, solidly coupled to the engine. The armature is built on a shaft which is a special forging, the shaft and coupling being in one piece. Another feature of the construction is the special hand barring gear that has been embodied in the coupling end of the rotor, so providing a simple means of turning over the whole engine generator shaft assembly. This consists of a lever which fits on a pivot pin mounted on the generator, and which carries at its end a swinging link. The free end of the link engages with projections on the fan disc of the rotor, forming a pawl-and-ratchet mechanism which can operative in either direction. Very accurate positioning of the crankshaft is therefore possible.

The magnet frame is of cost steel, the proportions ensuring moderate weight in conjunction with maximum strength. Mounting arrangements for the magnet frame include vertical and horizontal bases whereby the main generator frame is attached to the fabricated engine underbed, which in turn is bolted to the Diesel engine crankcase.

The generator has three field windings, namely, self and separately excited shunt windings, and a series winding which is used only for starting purposes. Its characteristics have been so designed that no complications such as separate exciters or regulating devices are necessary. Both the field and the armature coils have been fully pressed and bakelised, thereby eliminating shrinkage during service and ensuring rigidity, freedom from breakdown and close dimensional tolerances. Double-annealed soft copper is used throughout. All field coils are in separate sections and each section embodies terminals to receive the external connections. The main insulation is carried throughout the complete length of the armature coils, thus eliminating the source of weakness that would be present if the main insulation were supplied only to the slot portions of the coils.

Mounted on the main generator in the manner shown in Fig. 2, is the auxiliary generator, which, in turn, has a centrifugal blower mounted on it for the forced ventilation of the traction motors. This arrangement obviates the need for more than one belt drive from the main generator. The 1-hour rating of the auxiliary generator is 90 volts, 13.5 kW at 1,165/2,750 r. p. m. and the continuous rating is 12 kW under the same conditions; corresponding engine speeds are 350–825 r. p. m. The

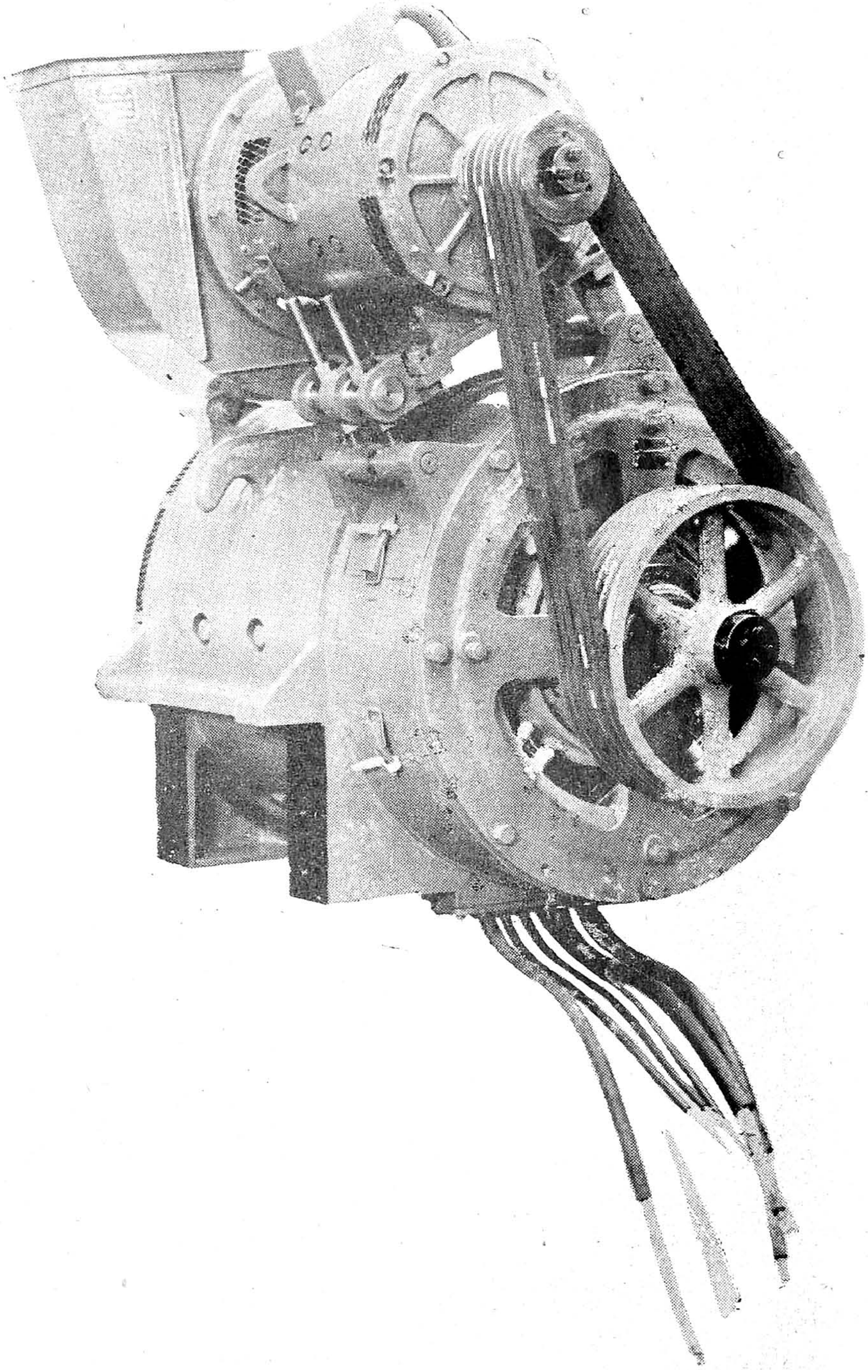

Fig. 2. As shown here, the auxiliary generator is mounted on top of the main generator and is bel driven. The forced-cooling fan for the traction motors is bolted to the auxiliary generator.

auxiliary generator voltage is maintained at 90 volts by means of a carbon-pile automatic voltage regulator installed in the driver's cab.

TRACTION MOTORS

The two axle-hung nose-suspended traction motors have double-reduction gearing, one gear-wheel and pinion being accommodated at each side of each motor. The layshaft joining the first and second train is carried on

roller bearings, and is mounted in an eccentric shaft whereby the drive is easily de-meshed if the locomotive has to be moved at speeds in excess of 20 m. p. h. from one shunting yard to another. In Fig. 3, which shows

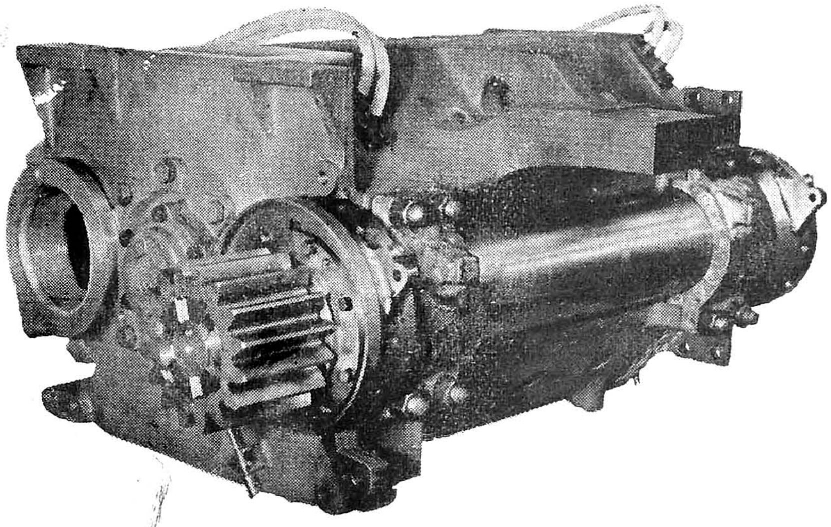

Fig. 3. The traction motors are nose-suspended and drive through double reduction gear. The lay-shaft is eccentrically mounted in the sleeve so that the pinions can be taken out of mesh.

the traction motor viewed from the layshaft end, the pinion is shown partly out of mesh. To move it in or out of mesh the nuts holding the two sleeve clamps are slackened and the clamps freed with a jack screw. The sleeve which carries the layshaft can then be rotated until the lugs at the ends correspond to the holes in the frame. A bolt then holds them in place.

A particular feature of the drive is the lining-up of the layshaft, the armature shaft and the axle all in the same plane. This has resulted in a motor of relatively small overall dimensions and, in that the armature shaft and axle are at the same height, it has provided ample clearance between the motor frame and the locomotive footplate to simplify erection and servicing. A further feature of the drive is that the armature pinion, as well as the pinion and gearwheel on the layshaft, is arranged for removal when necessary by high-pressure oil injection. As mentioned above, the motors are nose suspended and the necessary resilience is introduced by rubber springs located between the nose support and the fixing on the locomotive frame. Suspension bearings are of the conventional type, but to simplify maintenance, Armstrong lubricators have been fitted.

The Control gear was designed and made by Allen West and Company, Limited, Brighton, 7. It is contained in a single desk-type cubicle located in the driver's cab, and has controls which are to the standard British Railways pattern. The power circuits are also standard to British Railways in that the two traction motors are connected in parallel across the main generator. No series-paralleling arrangements are provided, however, since it was considered that the capacities of the generator and the motors would be ample for all the varying duties that the locomotives would be called upon to perform, including hump shunting, without resorting to this expediency. However, a switch has been included which weakens the field of the main generator, thereby enabling the speed of the Diesel engine to be raised and so increasing the quantity of air supplied to the traction motors while maintaining the same power output. This switch can be used when particularly heavy loads are being hump shunted.

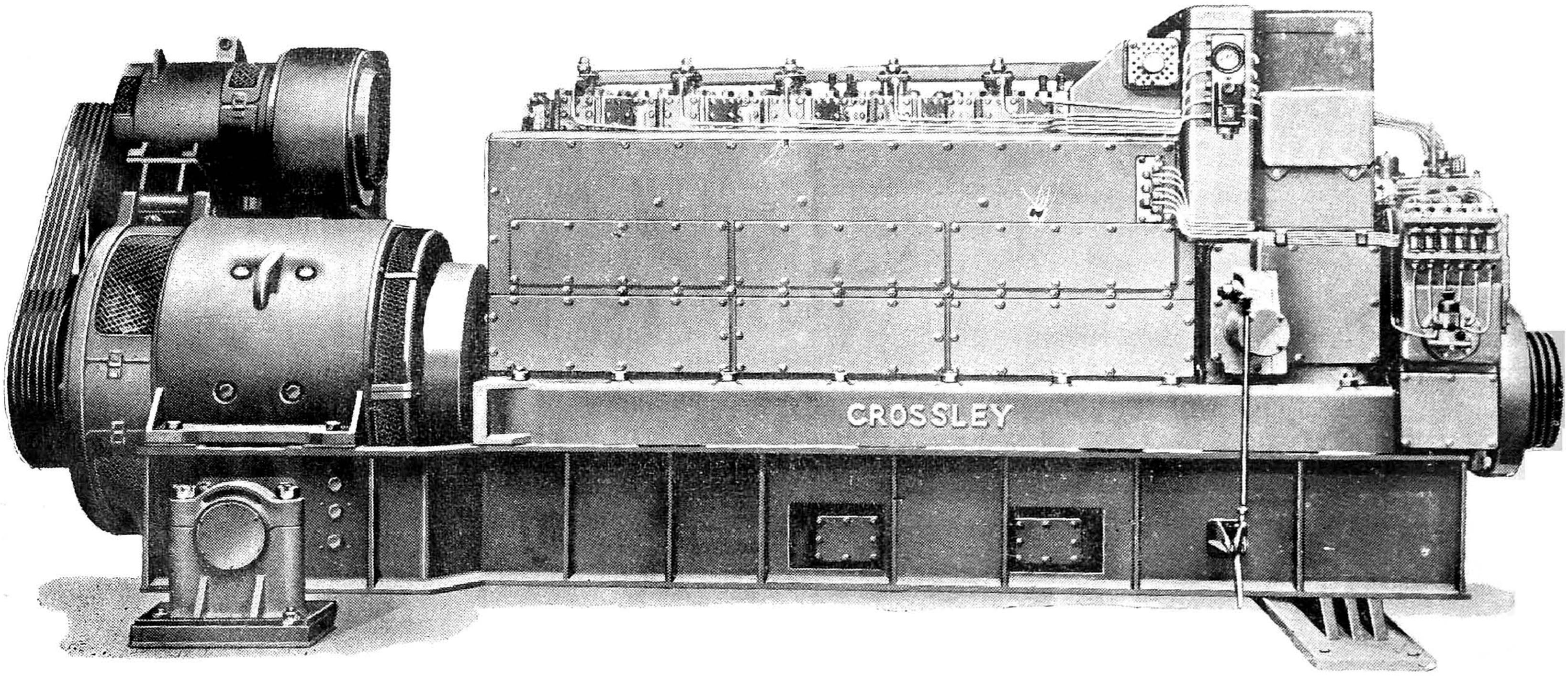

The notching sequence of the controller is as follows. Moving from 0 to 1 the main contactors are closed and excitation is applied to the generator. In between notches 1 and 2 there are seven steps of excitation (affecting the separately-excited winding) any one of which is a "running" position. The engine speed throughout remains constant at 400 r.p.m., having been increased from 350 r.p.m. (the idling speed) when the controller was moved into the first notch. When in notch 2, the maximum tractive effort at low speed is obtained. Between notches 2 and 3 the controller acts on the engine governor and raises the speed to its maximum of 850 r.p.m. Notch 4 is only for use at high running speeds; in this position the generator field is again increased. An example of the use of this position would be when the locomotive was returning light to pick up another train; wrong use in prevented by an automatic relay. The switch mentioned above for speeding-up the Diesel engine by weakening the field is quite separate from the main controller. Each motor is controlled by its own contactor and protected by its own overload relay. The general system is earthed through an earth-fault relay which provides protection both to the generator and the motors. Each motor can be isolated, if ever necessary, by means of the isolated links provided for this purpose in the contro-cubicle. The starting battery is divided, half being arranged each side of the main engine. This allows the relay contactor to be close to the generator and avoids taking heavycurrent cables into the cab. (By courtesy: The Indian Railway Engineer)

NEW BUILDING FOR SHOLAPUR STATION

THE foundation stone of the new double-storeyed Sholapur station building was laid on April 14 by Shri M. B. Kadadi, M. L. A., Sholapur. The new station building will answer a long-felt want as the present traffic has outgrown the facilities that the Railway can provide at the existing station building.

The new building with the amenities and the additional facilities which will be provided will cost nearly 18 lakhs of rupees. In addition to the main platform, an Island platform is also being provided. The new station building will be located at the site of the old Loco Shed which has already been shifted to make way for the construction of the new Building.

The accommodation in the new building will include a spacious III class Waiting Hall, with foodstalls, Booking Offices, Refreshment Rooms, Waiting Rooms, modern sanitary facilities and station offices on the ground floor. Retiring Rooms are being provided on the first floor.

The construction of the new station with extensive alterations to the yard under condition of traffic necessitates the execution of the project in a series of phases. This calls for a high decree of planning and careful execution which has been incorporated in the programme of works which have now commenced.

*** *** ***

NEW MEDICAL CAR CONSTRUCTED BY CENTRAL RAILWAY

THE Central Railway has just put on line an Accident Relief Medical Car for the broad gauge as a prototype. Designed by the Mechanical and Medical Departments of this Railway and built by the Carriage and Wagon Workshops at Matunga, the Medical Car is the first of its kind in India and is intended for use in case of accidents when it will be rushed to the site of accident by the first available means. It has its own operation theatre furnished with the latest medical equipment to deal with major emergency surgery. The ward portion of the car has stretcher arrangements for 18 lying cases. The mechanical design of the operation room equipment embodies the latest devices as used in battleships, to withstand vibration and shocks while the train is in motion.

The Medical Car has its own sterlizing equipment, a kitchen, hot and cold flowing water and a Refrigerator. It also has a special compartment for the medical staff. Another feature is the provision of an entrance at one end which can be used in a tunnel of cutting. The members of the Railway's St. John Ambulance Brigade, who will accompany the Medical Car, in addition to the normal compliment of medical and nursing staff, are all potential blood donors. The blood grouping is pre-determined and recorded in advance. In case of need, they will come forward to help save a life with their own blood.

The Medical Car was kept open on exhibition at Bombay V.T. for the latter half of 'Railway Week' during which period a large number of persons visited the coach.

28 SUBSTATIONS BEING EQUIPPED WITH HEWITTIC RECTIFIERS

BRITISH RAILWAYS SOUTHERN REGION

(Total 117,500 kW.)

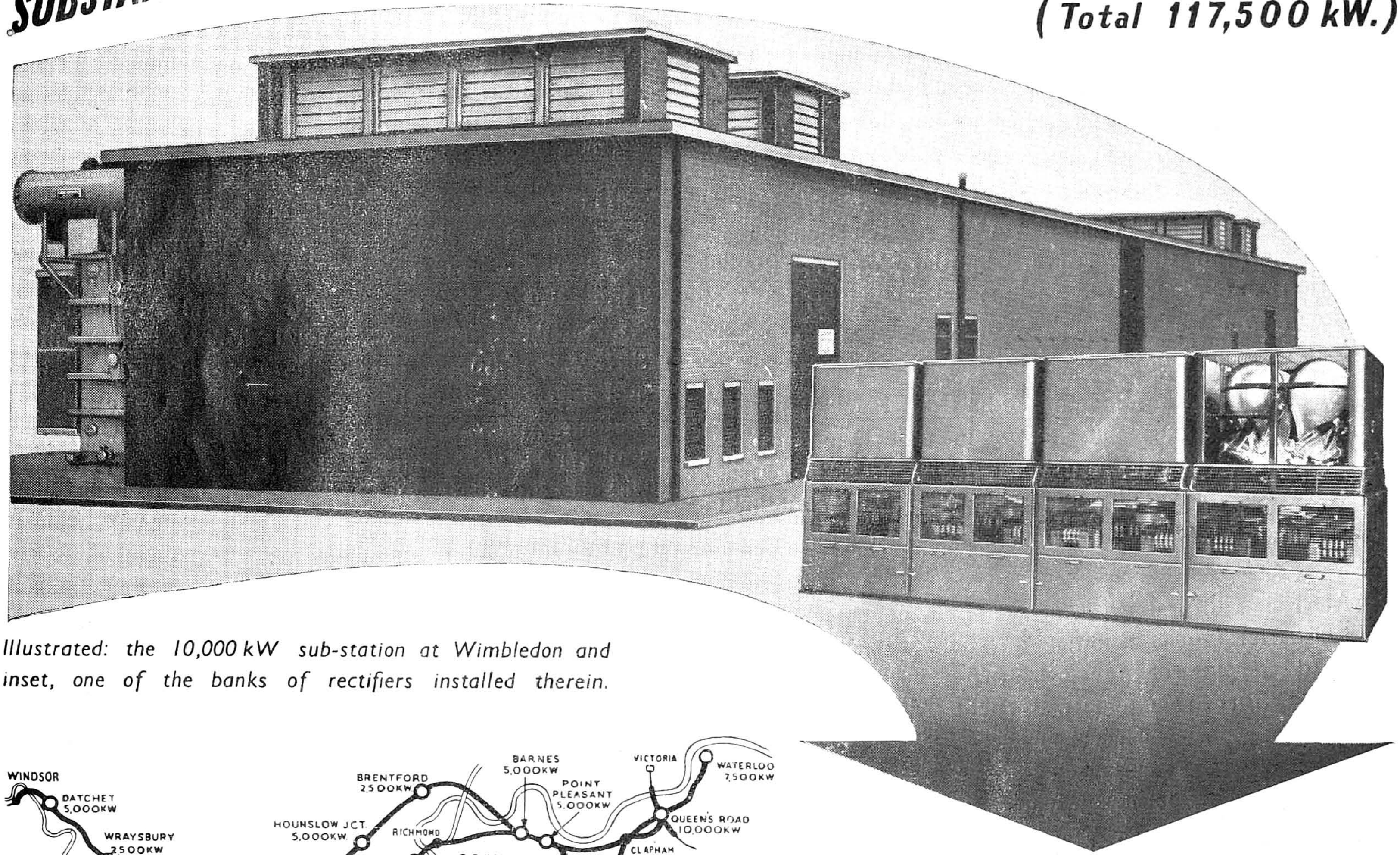

Illustrated: the 10,000 kW sub-station at Wimbledon and inset, one of the banks of rectifiers installed therein.

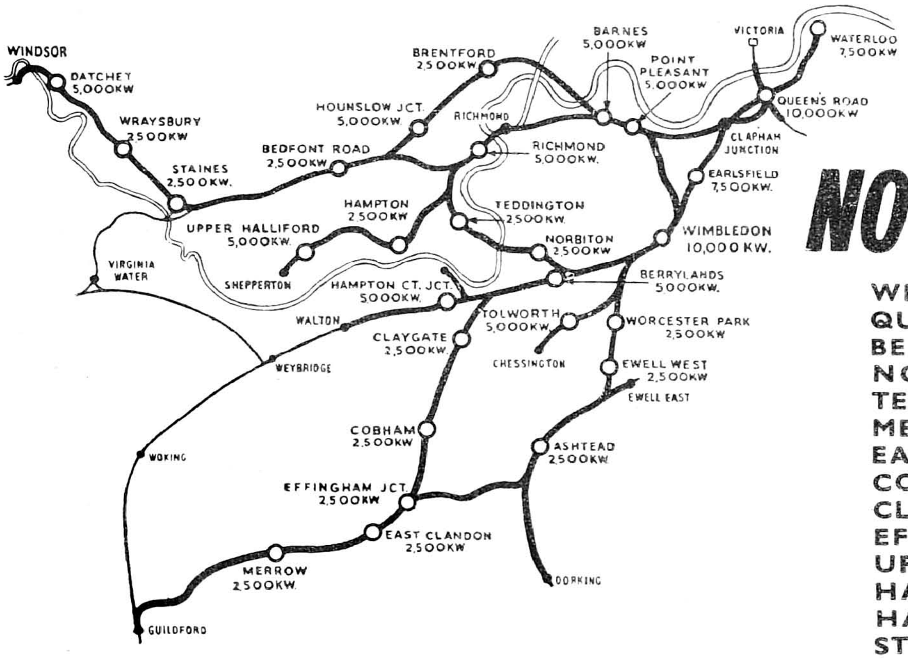

NOW COMMISSIONED

WIMBLEDON	10,000 kW
QUEENS ROAD	10,000 kW
BERRYLANDS	5,000 kW
NORBITON	2,500 kW
TEDDINGTON	2,500 kW
MERROW	2,500 kW
EAST CLANDON	2,500 kW
COBHAM	2,500 kW
CLAYGATE	2,500 kW
EFFINGHAM JNC.	2,500 kW
UPPER HALLIFORD	5,000 kW
HAMPTON	2,500 kW
HAMPTON COURT JUNCTION	5,000 kW
STAINES	2,500 kW
BEDFORD RD.	2,500 kW
HOUNSLOW JUNCTION	5,000 kW
WATERLOO	7,500 kW

HACKBRIDGE AND HEWITTIC ELECTRIC CO., LIMITED
WALTON-ON-THAMES - SURREY - ENGLAND
Telephone: Walton-on-Thames 760 (8 lines) *Telegrams: "Electric, Walton-on-Thames"*

RAILWAY WEEK ON WESTERN RAILWAY

THE Railway Week was inaugurated by Shri M. Ganapati, General Manager, Western Railway, at a "get-together" of Railway staff at Headquarter Office, Churchgate on 10th April, 1956. While welcoming the staff, the General Manager stated that there was no distinction of class or creed observed in the "get-together" and commended the work done by Railwaymen of all categories in raising the standard of the Railways. The main feature of the "get-together" was that the Class IV staff was entertained by the rest of the staff on the occasion. Similar "get-together" functions took place at the various Districts in the three regions, Bombay, Ajmer and Gondal.

On 10th April was inaugurated a Courtesy, Sanitation and Cleanliness Drive at stations in the three regions, which was continued through out the period of the week. A drive for punctuality of trains was also maintained during the week.

At the Cultural Programme held at the Railway Headquarter Office, Bombay on the 16th April, which marked the close of the week, prizes were awarded to staff by Shri M. Ganapati, General Manager, for the following:—

1. Best maintained track.
2. Best kept station.
3. Best essays on Railways in English and Regional languages by the staff.
4. Lucky number season tickets.

In connection with the "Best Maintained Track", a total award of Rs. 3,500/- was made. For the "Best Kept Station", prizes of Rs. 500/-, Rs. 300/- and Rs. 150/- were awarded for large size, medium size and small stations respectively. Nine stations, three in each group were awarded prizes. The recipients of prizes of Rs. 500/- each were Station Masters, Bandra, Pratapnagar and Ujjain. In respect of Lucky Number Season Tickets of passengers on the suburban section, five prizes were awarded to holders of lucky number season tickets current during the week.

A competition for the best kept house of Class III and Class IV staff was also held, and the staff of the Railway Colonies of the following stations won the prizes:—

Bandra, Bulsar, Baroda, Ratlam, Ajmer, Gangapur City, Abu Road, Mehsana and Kotah.

During the week, cultural programmes, sports and other activities were organised for the staff in Bombay and various districts of the Railway.

During the week, public interest in Railway matters was enlisted by broadcast talks on important Railway subjects given at Bombay, Ahmedabad, Rajkot, and Jaipur by Shri M. Ganapati, General Manager, Shri M. B. Patel, Deputy General Manager (Planning), Shri V. S. Sathe, Deputy General Manager (Amenities) and Shri S. C. Chatterjee, Regional Traffic Superintendent, Ajmer, respectively. A symposium on Railway subjects by officers of Central and Western Railways was also broadcast from Bombay.

On 10th and 16th April, documentary films on Railways and Five-Year Plan were shown before a large gathering at Bombay Central Station. Documentary film shows for rail passengers were also held in waiting halls at important stations,—Baroda, Surat, Rajkot, Bhavnagar, Ujjain, Ajmer and Jaipur. The shows were very well attended.

10,000 business reply cards, inviting the public to give their suggestions, for improving the service of the Railways, were issued to rail passengers at all important stations in the three regions. More than 700 replies have been received, and more replies are still coming in. The replies are being carefully scrutinised and attended to by the Administration.

In celebration of Railway Week, on 14th April, a dinner was given by the General Managers of Western and Central Railways on the lawns of the Western Railway Head quarters Office. Dr. Harekrushna Mahtab, Governor of Bombay, was the guest of honour on the occasion. In proposing a toast to the Indian Railways, Dr. Mahtab stressed the need for rapid development of Railways in all areas of the country. Shri M. N. Chakravarti, General Manager, Central Railway, proposed a toast to the President. Shri M. Ganapati, General Manager, Western Railway, while thanking the Governor and the guests, stated that the Railways, in spite of the many difficulties they had to face, had recorded considerable progress during these years. A distinguished gathering including Members of Consulates,

Sheriff, Members of the Municipal Corporation, dignitaries and high ranking Government officials were present. A cultural programme specially arranged for the function, followed the dinner.

Opportunity was taken during the Railway Week to arrange for opening ceremonies of new waiting halls, new engineering constructions and other installations which were completed. Among the important passenger facilities opened during the week, was the double line between Ahmedabad and Kalol — opened to traffic from 15th April, 1956.

The Headquarter Office was very beautifully floodlit at night during the week. Station buildings all along the three regions of the Railway were suitably decorated. Slogans like "Courtesy Secures Better Service" were also displayed at station buildings.

OPENING OF THE DOUBLE LINE BETWEEN SABARMATI AND KALOL

The Ahmedabad area, serving the highly industrialised textile centre carries very heavy traffic, both goods and passenger. It is also a vital point of transhipment between Broad Gauge and Meter Gauge. The Suburban Section of Ahmedabad between Ahmedabad and Mehsana including the various branch lines is developing fast. Considerable difficulty was being experienced in running trains on the section between Ahmedabad and Mehsana on the Meter Gauge line on account of the limited capacity.

To increase the capacity on this section, the Railway Board sanctioned the work of doubling the line between Ahmedabad and Kalol at an estimated cost of Rs. 96 lakhs. The work was started in August 1954 and is nearing completion. As a first phase, the double line between Sabarmathi and Kalol was opened for traffic from 15th April during the Railway Week by Shri Bhogilal Dhirajlal Lala (Lala-Kaka), the veteran Congress Leader of Gujerat. The remaining portion between Ahmedabad and Sabarmathi will be completed and opened for traffic shortly.

THE ROLE OF ENGINEERS ON RAILWAYS

(A Resume of Broadcast talk by Shri M. Ganapati, General Manager, during Railway Week.)

"It is over a century now since Railways were first constructed in our country, and the Civil Engineer has held the field throughout as an indispensable component of any Railway organisation", said Shri M. Ganapati, General Manager, Western Railway, in a broadcast on 10th April, 1956 from the All-India Radio, Bombay, on the occasion of the celeberation of the Railway Week.

"On him devolves the responsibility of undertaking the survey, both preliminary and final, of any Railway project, the eventual construction of the Railway line in question and its ultimate maintenance for the running of trains, both passenger and goods.

"The Engineer provides and maintains the wherewithal for the Operating, Commercial, Mechanical, Electrical Stores and Medical departments etc., of Railways. No one can, therefore, deny him the pride of place in the Railway organisation. He is verily the creater of assets as far as the Railways are concerned.

"His task in these diverse fields is by no means an easy one. Beginning with the survey of a projected Railway line he is faced with the problem of selecting the most suitable alignment for the projected Railway line between the two stations selected by the authorities.

"Coming next to the actual construction of the Railway line, while the economics of such construction would have been studied by the appropriate authority and ultimately sanctioned as necessary, the detailed final location survey enables the engineer to assess precisely the alignment to be followed, the extent of sub-grade work consisting of earth work in embankment and in cutting and tunnelling and the bridging both minor and major, to be done in connection with the project.

"Once the Railway is opened to traffic the Engineer's responsibility is not finished. Actually, his responsibility increases after the opening of the line of traffic. He has to constantly attend to the maintenance of the Railway lines so as to keep it in good condition for the running of trains.

"Quite apart from the construction and maintenance of the running line together with its sub-grade work, stations and yards, the engineers also have to construct and maintain various Workshops and Running Sheds for the repairs and maintenance of rolling stock.

CAREFUL PLANNING

"In regard to staff quarters, roads and horticulture in Railway colonies, not only has the engineer to design

and construct these buildings to suit modern requirements, but he has to plan carefully the layout of these colonies with adequate number of social amenity centres such as Institutes, clubs, children's parks, playfields, dispensaries and major hospitals wherever necessary.

" Office accommodation at various centres, including district, regional and general headquarters, is also the engineer's charge and in modern times this is assuming more and more importance on account of the large increase in staff, and the need to provide them with well ventilated and adequate accommodation for doing their work.

" Engineers have not only to initiate construction of news project but have often times to remodel yards to meet ever increasing requirements of facilities and to renew existing structures, especially of major bridges on running lines under traffic conditions without dislocating existing services. Here the ingenuity of the engineer is taxed to the utmost. One example which I can quote here, is that of the regirdering of the single line Ganga Bridge at Kashi consisting of 7 spans of 350 feet and 9 spans of 110 feet into a new double line bridge including the provision of an overhead roadway and footpaths, all under traffic conditions without stopping even a single train of the total of 52 trains which were running on this single line section. This is at once one of the most intricate and complicated pieces of Engineering work a Railway Engineer was called upon to execute. This work was actually done in a period of just 24 months. There are several instances like this where the Railway Engineer is called upon to rehabilitate existing assets on the Railways under traffic conditions and I can assure you that he rises to the occasion every time. The role of the Railway Engineer will, I am sure, be conceded as a very varied one demanding the utmost ingenuity, resourcefulness, care and devotion to duty.

" In talking about new construction, both of new Railway lines and projects connected with works calculated to bring self-sufficiency to Railways in the matter of rolling stock, mention may be made of a few important projects like the Assam Rail Link project, Kandla-Deesa, Chunar-Robertsonganj, Pathankot, Mukerian Railway constructions, conversion of Gandhidham-Bhuj Narrow-gauge line into Metre-gauge, restoration of Shoranur-Nilambur and Madura-Bodinaickanur lines, the Chittaranjan Locomotive Works and the Integra Coach Factory project, which were all completed in recent times in record time, to meet the urgent requirements of the Indian Railways. The skill, energy, enthusiasm, devotion to duty and the team spirit displayed by the engineers engaged in these construction works have alone been responsible for the outstanding results achieved. There are many more projects on the anvil during the Second Five-Year Plan and there is little doubt that the engineers will play their part in ensuring satisfactory completion of these projects, not only in time but within the estimated costs."

---

200 YEARS OF BRITISH TRANSPORT

LONDON EXHIBITION IN JULY

An exhibition illustrating the development of means of transport in Britain since the mid-18th century will open at Marlborough House, London, on July 10. It is being organized by a committee of well-known people, under the patronage of the Countess Mountbatten of Burma, in aid of the Royal College of Nursing.

A centre of attraction at the exhibition will be a show of travel clothes (including models for 1956), showing the changing trend in fashion since 1756 and linking up with some of the main exhibits.

The British Transport Commission is providing models of locomotives and carriages of various dates, as well as a selection of paintings and prints from its collection of historical relics. The main shipping lines are combining to illustrate the development of shipping by means of both models and photographs.

The British airlines' contribution will be a cavalcade of passenger air travel from the days of " bamboo-and-string " planes to the Britannia and Viscount airliners; and the Rootes Group is exhibiting four cars to show the changes in the conception and styling of motor-cars since the beginning of the century. The Sunbeam Mabley of 1901, with tiller steering and a single-cylinder, 3½-hp engine, will stand beside the 1956 Sunbeam Rapier.

The exhibition will also include coaches, a horse-drawn bus, and bicycles ranging from the " penny-farthing " to the latest models.

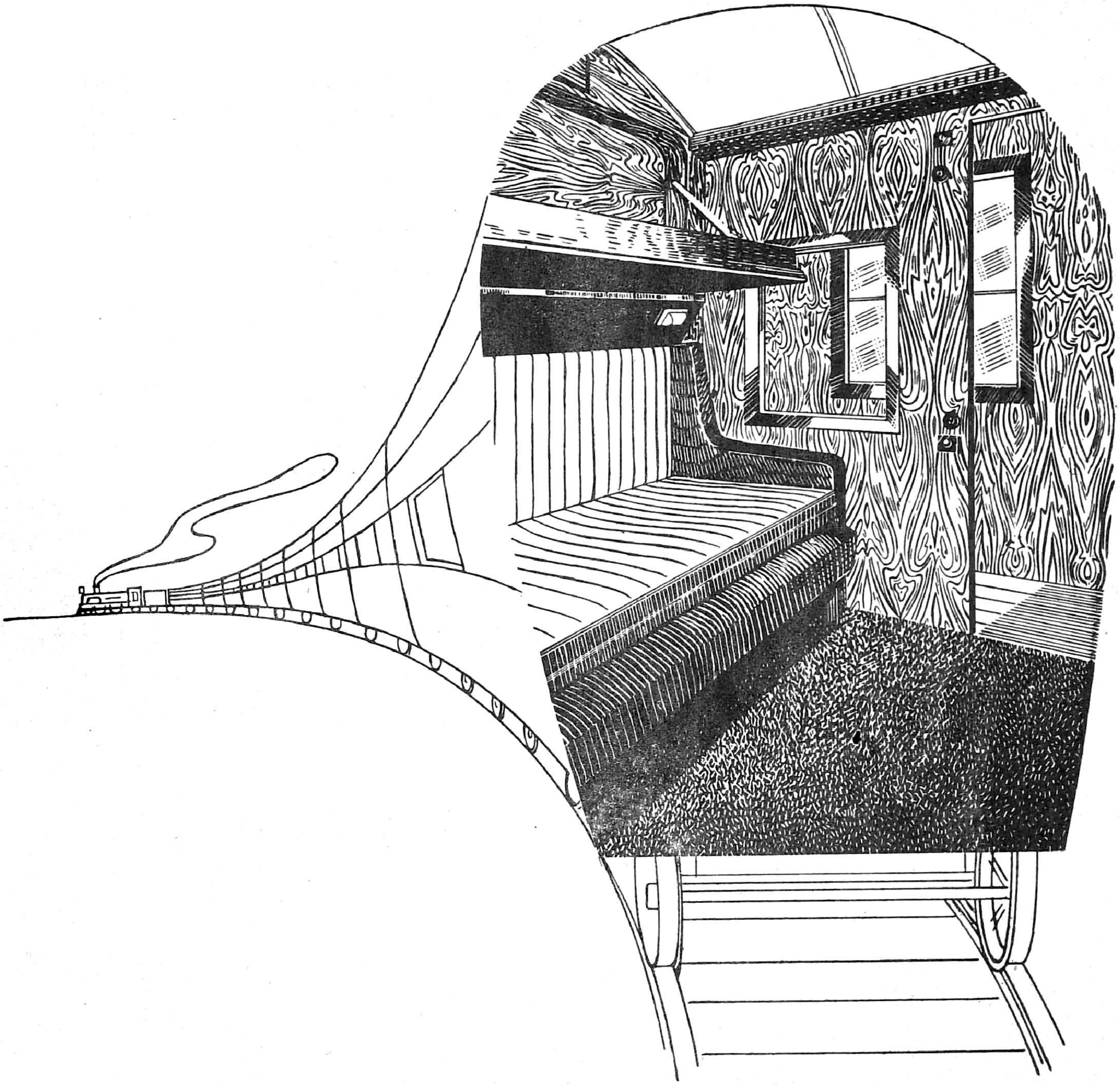

INDIA'S RAILWAYS USE
ANCHOR BRAND IPM PLYWOOD

Exceptional strength, durability and beauty are essential in materials used for rail coach interiors. Till recently, only expensive imported boards were considered good enough for this purpose. Today Anchor Brand IPM Plywood easily makes the grade, conforming to the highest specifications of the Indian Standards Institution.

IPM

THE INDIAN PLYWOOD MFG. CO. LTD.
9, Wallace Street, Fort, Bombay-1

The Production of Railway Materials at STEEL, PEECH & TOZER

STEEL, Peech & Tozer have been major producers of railway materials for many years, and a substantial proportion of their output has always been supplied to Commonwealth and overseas railways, and rolling stock manufacturers. The company was founded in 1883 at Rotherham, and from relatively small beginnings, the present day large and modern works has grown up, producing about 1,000,000 ingot tons of steel per annum and employing over 7,000 people. As a member of the United Steel group of companies, which together produce one-eighth of Britain's annual steel output, Steel, Peech & Tozer can call upon the extensive research facilities available at the United Steel Central Research & Development Department, which is unexcelled by any private research organisation in the world.

Wheels, tyres, axles and springs from the principal railway materials made by Steel, Peech & Tozer. In addition to their own machine shops, the company can also draw upon the services of two associated concerns in the United Steel group, Yorkshire Engine Company Limited and Owen & Dyson Limited, the former specialising in the machining of crank axles, while Owen & Dyson carry out the machining and assembly of wheels and axles.

WHEELS

Wheel manufacture begins with the division of an ingot into suitably sized blocks, this operation being effected in a specially designed ingot breaking machine. Each block in carefully marked and retains its identity throughout the manufacturing process, so that there is a complete check back from the finished wheel to the cast of steel from which it was made. After reheating in a continuous gas fired bogie furnace to a temperature of about 1,200° C., the blocks are descaled and transferred to a 6,000 ton forging press. The forged wheel blank has a smaller diameter and thicker web than the finished wheel, so that—after further reheating—it must next be rolled in a finishing mill.

This mill is of the vertical type, designed to produce wheels from 18 in. to 48 in. in outside diameter, the wheel blank being supported by a mandrel whose ends rest in slides. The only driven rolls are the two web rolls, which are rotated by variable speed D. C. motors.

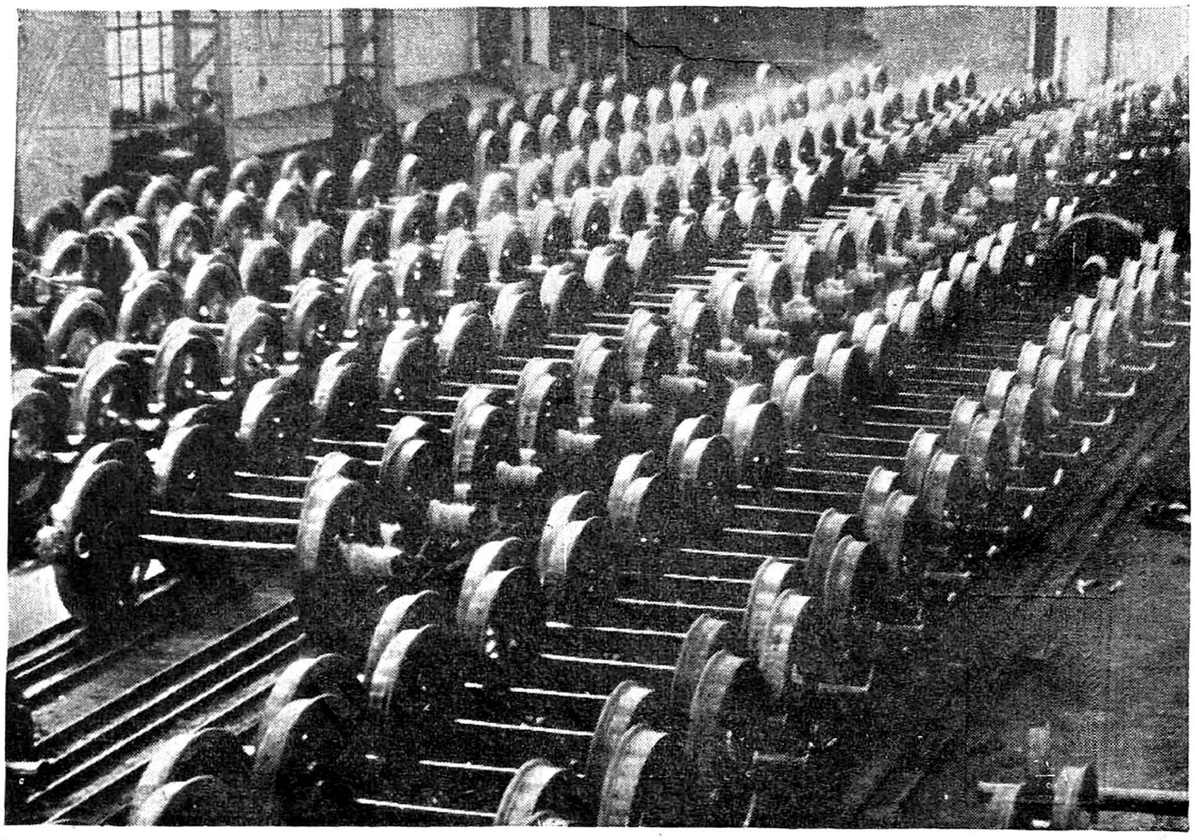

Wheels and Axles awaiting despatch at Steel, Peech & Tozer.

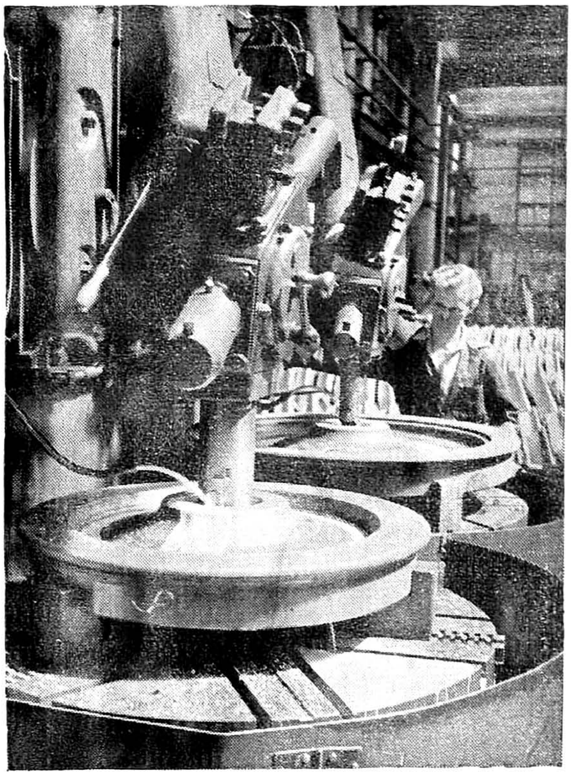

Finish Boring of Wheels at Steel, Peech & Tozer.

Actuated by oil pressure, these rolls swing in a horizontal plane; when thrust inwards, they exert equal pressure on the two sides of the web of the wheel blank, which consequently begins to rotate in a vertical plane. The two edging rolls then move up and press against the rim, thus controlling its width. Finally, the back roll, which has a centre corresponding to the tread and flange of the finished wheel, is brought up into position. Each wheel is rolled close to profile, so reducing the amount of subsequent machining require, with beneficial effects on the physical characteristics.

Charging machines transfer the rolled wheels to a 1,500 ton hydraulic dishing press, where the wheel boss is brought into the correct horizontal plane relative to the tread. It remains only for the desired heat treatment to be given and the wheels are ready for inspection and testing—both important features of works practice at Steel, Peech & Tozer where rigorous standards are laid down for every kind of product.

TYRES

The tyre mill and auxiliary plant have a production capacity of approximately 1,500 tyres per week for every kind of rolling stock, including locomotive, carriage and wagon, electric stock, light railway and tramway. Tyres varying from a minimum internal diameter of 12 in. to a maximum of 90 in. can be rolled, and particular attention is devoted to the manufacture of high tensile tyres to meet arduous service conditions, including extremes of temperature, severe gradients and sharp curvature.

As with all the other railway materials described here, steel from the company's open hearth furnaces provides the basis for the finished tyres. The ingots are first divided into separate blocks—on the same machine as the wheel block—and the blocks are then charged into a continuous furnace for heating up to about 1200° C. After a thorough soaking at this temperature, the blocks are removed, weighed and transferred to a 2,000 ton press. Here, each block is forged into a tyre blank, the centre being punched out in the process. On completion of forging, the tyre blank is reheated to the correct rolling temperature and transferred to a vertical roughing mill, where the section is rough formed.

The final operation is carried out on the finishing mill, which is of the horizontal box roll type, the main roll forming three sides of a box into which the tyre is forced by the centre roll. When the correct diameter is reached, it is shown on a special indicator gauge, the gauge setting being adjusted to give the correct diameter when the tyre is cold.

A small hydraulic press stamps the maker's and customer's initials on the tyre, which is then allowed to cool before being inspected for defects and gauged for size.

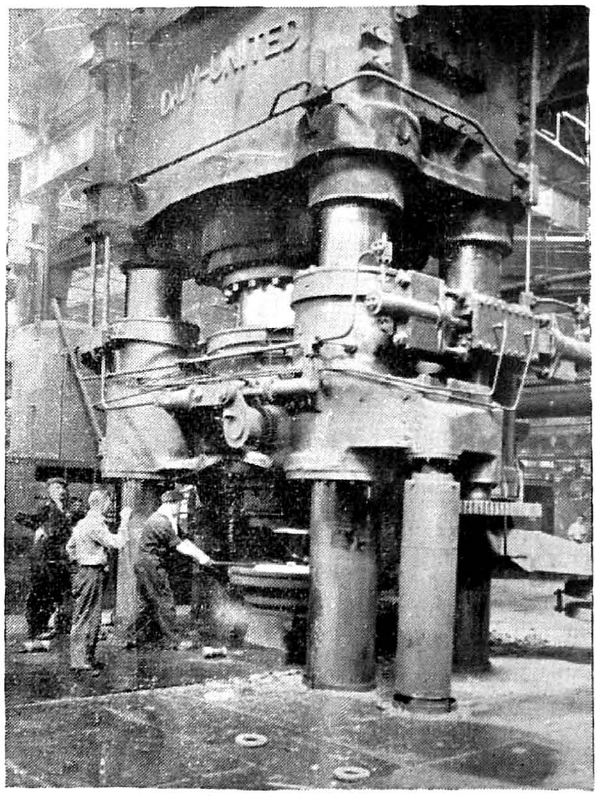

6000-Ton Wheel Forging Press at Steel, Peech & Tozer.

AXLES

With over seventy years' experience in the manufacture of axles, Steel, Peech & Tozer have recently taken another stride forward by installing a new axle forge, at a cost of £. 150,000/-.

This forge, designed for an output of upwards of 100 axles per shift, takes advantage of the most up-to-date techniques in axle production and the equipment installed has been laid out to ensure continuous flow of the material during the different stages of manufacture.

Axle blooms from the company's rolling mills are received in wagons by rail and are removed by electric overhead crane for stacking adjacent to a continuous furnace. The blooms are pushed down the furnace by an electric pusher, the normal heating period being

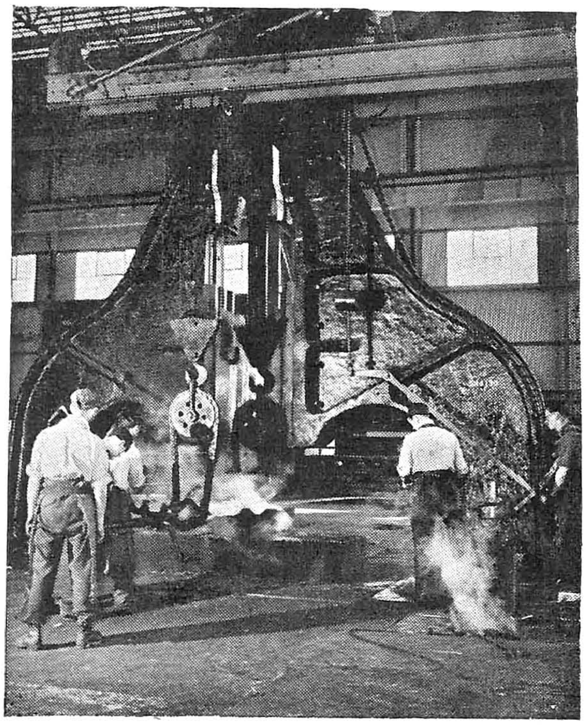

Forging a Railway Axle on a 7-Ton Hammer in the New Forge at Steel, Peech & Tozer.

approximately five hours. When it has reached the correct temperature of 1,250° C., the bloom is delivered by a friction roll pusher, operating at right-angles to the centre line of the furnace, on to gravity rolls, from which it is picked up for forging.

Throughout the forging process, the bloom is held by a 6,000 lb. low, straight-line, bridge-type manipulator of the non-revolving type, operating on a track which runs in front of a 7 ton hammer.

When forging of one end of the axle is complete, it is rotated mechanically through 180° and forging of the other end proceeds. Doublegrooved fixed swage tools are used, one groove forging the middle of the axle while the other shapes the end collar, journal and wheelseat.

On completion of forging, the axle is placed on a tilting gantry which raises it to the height of the forehearth of the heat treatment furnace. Here, it is allowed to cool below the point of recalescence before being charged into the furnace. It rolls through the furnace during a period of four hours and is reheated to 850° C. On leaving the furnace, the axles roll on to a platform above a dipping tank if they are to be oil-quenched, those which are to be normalised passing straight over to a turntable. From the turntable, the axles roll forward to cooling racks, and are next transferred to a straightening press, which can exert a pressure of 150 tons; hydraulically-operated spinning rollers are provided to facilitate rotation of the axle during the straightening operation. The ends of the axles are then cut to the correct length by double-headed saws and pass forward for inspection.

Each axle is given a surface inspection and dimensions are checked. Axles may be loaded either direct into railway wagons for despatch to destination, if required in the "as forged" condition, or on to lorries for delivery for machining, this latter operation being carried out by Owen & Dyson Limited.

To cope with demands for axles when, for any reason, the new 7 ton hammer and its ancillary equipment are out of service, an existing 5 ton hammer has been transferred to the new axle forge building. Normally, this hammer operates as an independent unit on general forgings. It is served by two new batch type gas-fired furnaces, situated one on each side of the hammer. Each furnace is served by a 4 ton electrically-operated jib crane.

LAMINATED SPRINGS

The provision of efficiently made springs from reliable steel plays a big part in reducing maintenance costs on rolling stock. Steel, Peech & Tozer springs are supplied to railways all over the world and are designed to meet a wide range of operating conditions.

Spring steel reaches the fully mechanised spring shop from the rolling mills in bar form. The bars vary in

PRESSED STEEL COMPANY BUILD STEEL STRONG PRESSED STEEL COMPANY BUILD STEEL STRONG PRESSED STEEL

greater strength
STEEL WAGONS
longer service

BUILT BY BRITAIN'S LARGEST MANUFACTURERS
OF PRESSED STEEL BODYWORK FOR TRANSPORTATION

PRESSED STEEL COMPANY LIMITED

RAILWAY DIVISION.

PAISLEY SCOTLAND

HEAD OFFICE:
COWLEY OXFORD

LONDON OFFICE:
SCEPTRE HOUSE
169 REGENT STREET W.1.

OVER 11,000 of these sturdy, all-steel, 16-ton mineral wagons are Pressed Steel built to the order of British Railways every year.

STRENGTH of construction means length — of service. Fewer running repairs or maintenance, longer operative life, greater economy in the long run. Pressed Steel Company Limited, one of Britain's greatest engineering organisations, build steel wagons and rolling stock . . . many thousands strong . . . for world railways.

P S C

Pressed Steel Company Limited are manufacturers also of Motor Car Bodies, Prestcold Refrigeration Equipment and Pressings of all kinds.

length from 14 ft. to 16 ft. rolled to close tolerance. They are cold sheared to length, each bar being turned after each cut so as to give uniform scarfing to the ends. The plates are next heated and the required nibs and slits hot punched This is followed by spearing and shaping, according to specification, and where the design calls for a rolled eye back plate, the ends are heated and subsequently rolled in a special machine.

All the plates are charged into a continuous gas fired furnace in the correct sequence for assembly. Temperature at the delivery end is controlled automatically and is normally set between 950 and 1,000° C. On removal from the furnace, each plate is placed in a hydraulic press for bending to shape; it is then quenched in either a water or oil bath, as specified by the purchaser.

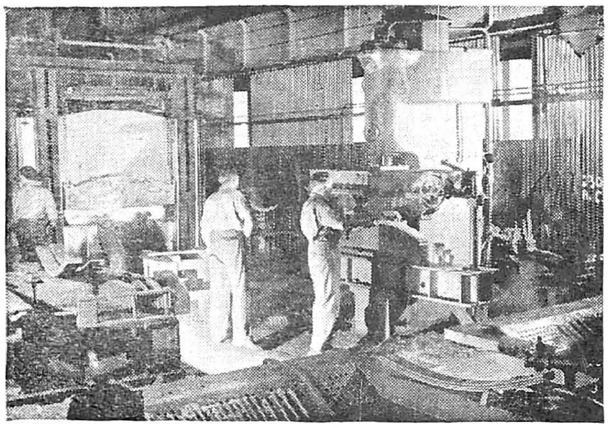

Furnaces and Presses in the Laminated Spring Shop at Steel, Peech & Tozer.

Endless conveyor belts lift the quenched plates out of the baths and they are then transferred to another conveyor belt which passes through a tempering furnace. Each plate is in the furnace about 25 minutes, the temperature being maintained at 450° C.

In the assembly section, each plate is checked against the preceding one to ensure a close fit after final assembly. To rectify any small irregularities, small hydraulically-operated presses are installed. A temporary buckle is fitted to the spring after assembly, and it then passes to a 20 ton scragging machine where the camber is tested. After a liberal application of linseed oil to prevent corrosion, the plates are assembled prior to buckling. Buckles are heated to 900° C before fitting to the spring and are subjected to simultaneous horizontal and verticle pressure in a special press after they have been placed in position.

All springs are carefully checked to ensure that the buckle is accurately positioned and a proportion of the completed springs are tested under load.

There remains a considerable demand for hand-made springs for special purposes and these are produced by highly skilled craftsmen in a separate shop, where the plates are bent, hardened, tempered and fitted by hand. *(By courtesy: The Ind. Rlys. Workshop Magazine)*

EXPRESS GOODS SERVICE PROVING POPULAR

The Express Goods service introduced last year on an experimental basis is now running to published time-tables like passenger trains and has proved attractive to the commercial community because, compared to ordinary goods trains, its running time has been reduced practically by 50 per cent.

This experiment resembles practices followed on the more advanced French and German Railways. Originally introduced as Weekly Express Trains, the popularity of this experiment quickly enabled the Railway Board to issue instructions for their conversion into daily services with effect from June last. At present, there are 32 Express Goods Trains—24 on the broad gauge system and eight on the metre gauge system. Twenty of these are daily services, the remainder running weekly, bi-weekly or at more frequent intervals.

The Express Goods Trains generally run through from the starting to the terminating stations, stopping only at a few selected intermediate stations for watering, refuelling and changing of engines and staff. To take advantage of these stops, traffic is booked at these stations and traffic coming in from the branch lines is also cleared onwards from there by the Express Goods Trains.

Train departures are not delayed merely on the ground that full train loads are not forthcoming by the scheduled departure time. If, however, more goods are offered than an Express Train can carry, a schedule of priorities operates. Within each priority category, traffic is cleared on the "first come, first served" basis.

The Express Service helps both the Railways and the commercial community. It helps in the quicker turn-round of wagons and enables the consignors and consignees of goods to move their wares from place to place faster.

Comparative Study of Diesel Electric and other Diesel Type Locomotives

A study was undertaken by locomotive and Traction Experts of General Electric Company to realistically evaluate the comparative performances of diesel-electric Locomotives and Torque-converter Locomotives, on the basis of basic theoretical principles, accepted engineering practices and experience accumulated over a period of time, derived from actual operation of the engines. This problem is discussed below:

A Torque-Converter may be defined simply as any mechanism that gains torque multiplication at the sacrifice of speed. The Hydraulic Torque-Converter is nothing new; it has been in use for more than 40 years. Invented by Dr. Herman Foettinger shortly after the turn of the century, its first application was as a speed reduction unit in ship propulsion. This was before the advent of high-speed helical gearing. The invention was exploited to a very limited extent until very recently, when economic factors rather than engineering need, made it more practical. New manufacturing techniques have reduced the cost of the different component parts making it more competitive with present day standards.

It is apparent that the application, not the device, is new and consequently no new principles are involved. We can thus see that the hydraulic torque converter locomotive is just another form of a mechanical locomotive and as such, has most of the same old disadvantages of a mechanical locomotive. The basic problem of any locomotive is distributing the power from a central source to the wheels. In reality, this problem has not been simplified in the Hydraulic Torque-Converter Locomotive over mechanical locomotives. The complication of distributing power mechanically from a central source to the wheels is steel basically the major problem. An analogy may be drawn by considering an old machine shop with its maze of overhead shafts and tangle of belts which may be considered modern with the addition of a Torque Converter at the power source. In a similar manner, the gearing and shafting problem on a diesel hydraulic torque converter locomotive is not simplified. Figure 1 shows schematically one of the newest designs of a hydraulic mechanical locomotive.

There are applications where the hydraulic torque converter locomotive can perform an adequate job competitively. These cases are all low horsepower, rigid frame applications. However, as the locomotive size increases, as we get away from a rigid frame, as we get above a 4 to 1 speed range, the hydraulic torque converter becomes less and less attractive engineering wise. Each time a shaft changes direction, a gear unit has got to be interposed; each time lateral displacement of the power train is necessary, an additional gear unit must be added; each time flexibility is required to take care of vertical or lateral movement of the axle with respect to the locomotive platform, flexible couplings and splines must be added. All this is achieved at a loss of efficiency in operation and increased maintenance of the locomotive.

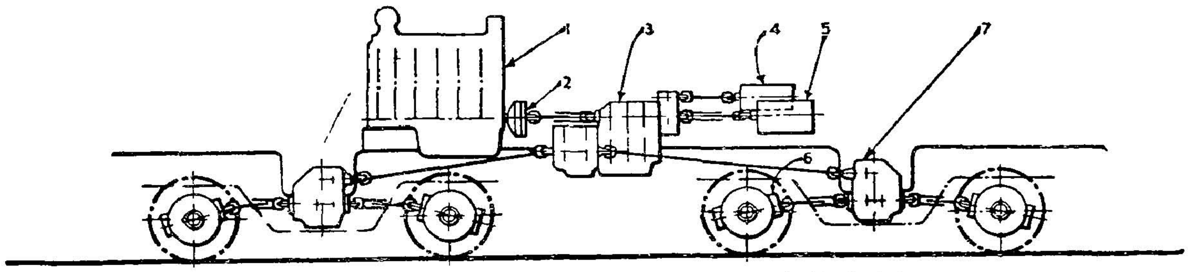

1 Diesel engine
2 Flexible coupling
3 Hydraulic transmission
4 Lighting and starting generator
5 Auxiliary generator for compressor motor
6. Bevel axle drive
7. Reduction and alternative-drive gearbox

Elements of power and transmission systems, German diesel-hydraulic locomotive

Fig. 1.

This design includes: *9—Cardan shafts, requiring:*
18 Universal joints
6 Spline couplings
18 Bearings (at a very minimum)
3—Mechanical gear boxes
2—Auxiliary generators
4—Sets of bevel gears
1—Transmission which is comprised of either
3 hydraulic torque converters
or 1 permanently filled converter and
1 four-speed mechanical drive

Manufacturer states "—drive to all four axles is achieved without a multiplicity of shafts and rods and without the result of a cumbersome locomotive design.

The Torque Converter is not reversible and therefore, a separate mechanical reverse gear is also necessary.

To meet the performance of the electric drive, a hydraulic torque converter locomotive needs a mechanical gear box and reverse gear. If a speed range in excess of 4 to 1 is required, some mechanism to enable shifting under load is necessary. This usually takes the form of a planetary type gear unit with a complication of clutches and brakes. The torque converter unit along with associated mechanical gear boxes, propeller shafts, universal joints, bevel gears, clutches, brakes, hydraulic controls, oil coolers and similar equipment present quite a maintenance problem.

In a torque-converter drive, since neither the work nor the adjustment required allow the use of friction bearings, approximately 20 high precision gears and 50 roller bearings are required within the casing of each converter. Pressure lubrication must be used necessitating use of pumps, one for use when the vehicle is in motion, and one for use when it has been stopped with the engine running. In addition to the pumps, lot of piping is required which adds further complications. Any failure within the converter casing means pulling out a truck from the car and dismantling the whole casing. It would be required, for instance, that all bearings have a similar life to avoid all this work just for one failed bearing. A job of this nature takes several days, since the adjustments are very fine. On this point, the hydraulic transmission's disadvantage is great since, with electrical transmission systems, changing a traction motor is quite a simple operation and does not require pulling out the truck from the locomotive.

There is some maximum horsepower beyond which friction clutches are not practical. It is of little importance whether the clutches are in or out of some automatic shift mechanism; they cannot transmit more than a limited amount of power. This weak link would be very costly in hydraulic mechanical locomotives.

Some means must be provided for cooling the fluid in the torque converter. The method which is more prominent is that of using a heat exchanger coupled to the radiator or utilizing a separate radiator. The use of the fuel tanks as a heat absorbing and radiating body has a very serious drawback in that the capacity is extremely limited when the fuel supply is low.

Leakage problems are experienced some times with hydraulic transmission when used in tropical climate where high ambient temperatures are common. Under such conditions the cooling system on the transmission has been found inadequate and the locomotives lose power to a considerable extent when the oil heats up.

Derailment Problems:

In diesel hydraulic locomotives there are cases where the engine is mounted on the platform. Use must then be made of telescopic shafts and cardan shafts, so as to reach the truck. In case of derailments, these shafts suffer damage and misalignment.

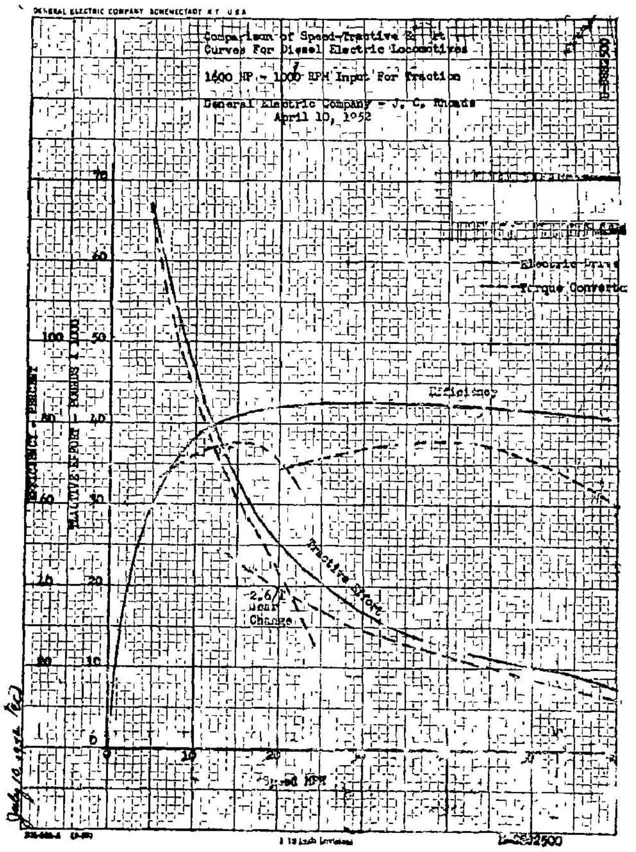

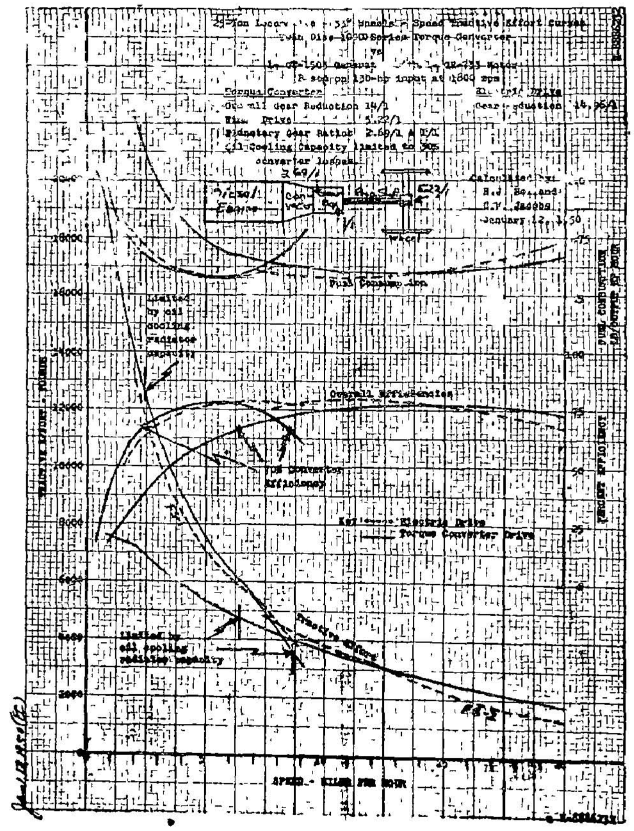

Though the initial cost of a torque converter locomotive may be less than a Diesel Electric, such factors as increased maintenance and operating costs and lack of flexibility of transmission should be taken into account and given due consideration.

A summary of the advantages and disadvantages of hydraulic torque converter-Gear Change and Electric Drive is given below :

Hydraulic Torque Converter-Locomotives
Advantages

1. Converter itself small and compact

2. Usual design of converter oil cooler enables high continuous adhesion.

Disadvantages

1. A new application for locomotive use.

2. Rail shock transmitted from axle to direct connected spline propeller shaft, universal joint, gear box, converter turbine and housing.

3. Three axles mean additional chains or side rods. Four axles either additional chains or rods or extra spline propeller shaft and associated gears. Increase in number of axles on rigid frame increases minimum radius of negotiable curves. Very complicated shafting when applied to swivel or articulated trucks.

4. High mechanical maintenance.

5. Mechanical reverse gears always necessary.

6. Either drive chain or splined propeller shaft and universal joint necessary.

7. Speed change clutch and brakes similar to Model 'T' Ford transmission necessary for gear changes.

8. Speed change, clutch and brakes are necessary for gear changes.

9. Oil cooling radiator necessary and larger fans needed for cooling both oil and water. This means reduction in power to converter, less space in engine room, more weight, extra piping and increased maintenance.

10. Electric or air starting motor necessary.

11. Maintenance of clutches, gears and brakes always difficult. Most problems the same as on straight mechanical locomotives.

12. Inspections are difficult and must be frequent. Oil level must be checked and all filters cleaned twice weekly. Clutch release, transmission bearings and accelerator controls must be checked and greased twice monthly. Auxiliary pumps and all fluid connections and controls must be checked once a month since overheating is a serious problem. The radiator must be cleaned at least once a month.

Electric Drive Locomotives
Advantages

1. Proven Dependability

2. Rail shock reduced since only traction motor mounted on axle. No mechanical connections between engine generator set and axles.

3. Readily adapted to any number of axles.

4. Low electrical maintenance and practically no mechanical maintenance.

5. No gears to shift, either forward or reverse.

6. No propeller shaft and universal joints to maintain.

7. No clutch and brake assembly to maintain and replace.

8. Readily adapted to swivel or articulated trucks.

9. Equipment is self-ventilated. Heat is disposed of at course. Generated heat is radiated by the coils and hot air is carried away by fans mounted on armature shaft.

10. Generator provided with starting winding to crank engine.

11. Easy to maintain.

12 Easy to inspect.

13. Can be provided with dynamic braking.

14. Easily capable of 10 to 1 speed range.

(Continued on page 24)

British Locomotives for World's Railways

OVER 400 EXPORTED TO INDIA IN FIVE YEARS

SINCE the war, Britain's locomotive industry has exported to all parts of the world locomotives and component parts to the value of no less than £ 100,000,000, says an article in a special trade and transport issue of the *British Trade Journal and Export World*.

Today Britain can offer deliveries of locomotive as speedily as any other country. During the last five years the industry has exported no fewer than 405 locomotives to India, 468 to Africa, 395 to Australia, and 356 to other parts of the world. These were all main-line locos, some of the largest ever to leave Britain.

There have also been numerous orders for Diesel locomotives; these include 30 for Brazil, 25 for Ceylon, 94 for Ireland, and 75 for the Netherlands. Electric locomotives have also been produced in increasing numbers, and these include very large main-line locomotives for South Africa, Spain and Brazil. In 1953, no less than 93 per cent. of the total production of the industry went overseas.

The article recalls that one of the largest contracts even placed for railway equipment was awarded last year to a British firm (Metropolitan-Vickers). The Central Railway of Brazil ordered 200 complete railway coaches, to be built and equipped in Britain, and 100 sets of electrical equipment to fit into coaches being built in Brazil. The contract, financed in part by an International Bank loan of $ 12,500,000 was worth about £ 7,000,000.

U. K. MASTER PLAN

Referring to the new 15-year plan to re-equip and reorganize Britain's State-owned railways, the article observes that oversea buyers interested in this field will watch with interest implementation of various aspects of what has been called the master plan for British Railways. The £ 1,200 million programme, which will include extensive schemes for electrification, more Diesel locomotives, re-planning of stations, and improvement of rolling stock and the permanent way, may, by the time it is completed, set new standards of modern railway practice which will serve as a model for the world.

The potentialities of gas turbine and atomic power for propulsion are not being overlooked.

(Continued from page 23)

15. The speed of the diesel engine is independent of the locomotive speed so that the engine can be driven at its most economical speed for each output required, thus reducing wear and maintenance cost. Close engine governing enables best utilisation of engine output and the avoidance of critical speeds in the neighbourhood of service speeds. The tractive effort speed characteristic obtained with diesel electric locomotive enables the motive power unit to be used to full advantage.

16. Electric transmission eliminates interruption in the transmission of power when speed is changed. This eliminates the jerks in the movement of the train and road shocks to the engine.

17. Electric transmission permits practically all speeds between zero and maximum to be obtained smoothly which will allow the running of the vehicle to be better adapted to the profile of the line by using the total power of the engine.

18. It permits lower axle loading and most favourable arrangement of engine driving and carrying axles for good distribution of weight and running qualities.

19. Facility of simple and fool-proof remote and multiple control with uniform variation of the tractive effort will enable the train automatically adjusting to the engine output and train resistance and accelerating to the maximum speed in minimum time. When grades and curves are to be negotiated, no change of operation is necessary, the engine automatically developing maximum power without fear of over loading or stalling.

Disadvantages

1. Lower continuous adhesion (not a disadvantage for normal switching or road service).

Two comparison curves have been drawn up, one for 1600-h.p. road service application and the other for small switching application. These curves are made with conservative estimates of gears and other mechanical losses. These curves provide a good comparison of the two types of transmission.

HOW TO RESERVE ACCOMMODATION

Unless you reserve your berth (I and II Class) or Seat (3rd Class long distance) in advance, you may not be sure of getting accommodation on the train you wish to travel by.

Application should be made to the Station Master of your starting station at least 3 days in advance specifying the date and train by which you intend travelling and the tickets must be bought in advance. The reservation fee leviable is 8 annas per seat or berth.

Reservation by I and II Class from intermediate stations by Express trains can also be made similarly, but reservation ticket can be issued only after getting an advice from the Reservation Centre that the reservation has been made.

Tickets will be issued only if accommodation is available.

If the reserved seats or berths are not occupied at least 5 minutes before the booked departure of the train the reservation will be cancelled and the seat or berth given away to another.

Reservation fee is not refundable.

III Class seats are also reservable on Express and certain other important trains for long distance passengers from the train-starting stations on payment of a reservation fee of four annas per seat.

Do not occupy a berth or seat reserved for another, as you are liable to be displaced at the last moment.

If you find another person occupying the berth or seat reserved for you and if he will not vacate it on demand, report it to the Guard or Station Master. They will help you.

(Inserted in the interests of Travelling Public by the Public Relations Officer, Southern Railways Magazine)

CLEANLINESS LEADS TO HEALTH AND HAPPINESS

Clean orderly habits contribute to general health and welfare and as such to happiness and prosperity; they are more important than medicines.

Cleanliness prevents disease; medicine only attempts to cure.

Cleanliness of the person, of the houses and colonies, reflects discipline in the individual and the community. Discipline is the foundation stone for progress of oneself and the country. Cleanliness is a good habit. It is also cheap.

All Railwaymen should set an example of cleanliness. This will help others and themselves.

Printed and Published by Sri T. S. S. Rao, Public Relations Officer at S. R. Press for the "Southern Railways Magazine", Manojiappa Street, Fort, Tanjore.
Managing Editor : T. S. Krishna Rao.